heritage brazil

Southampton NY

UD Indoor / Outdoor Collection

Dining Table

S U M A

SUMA

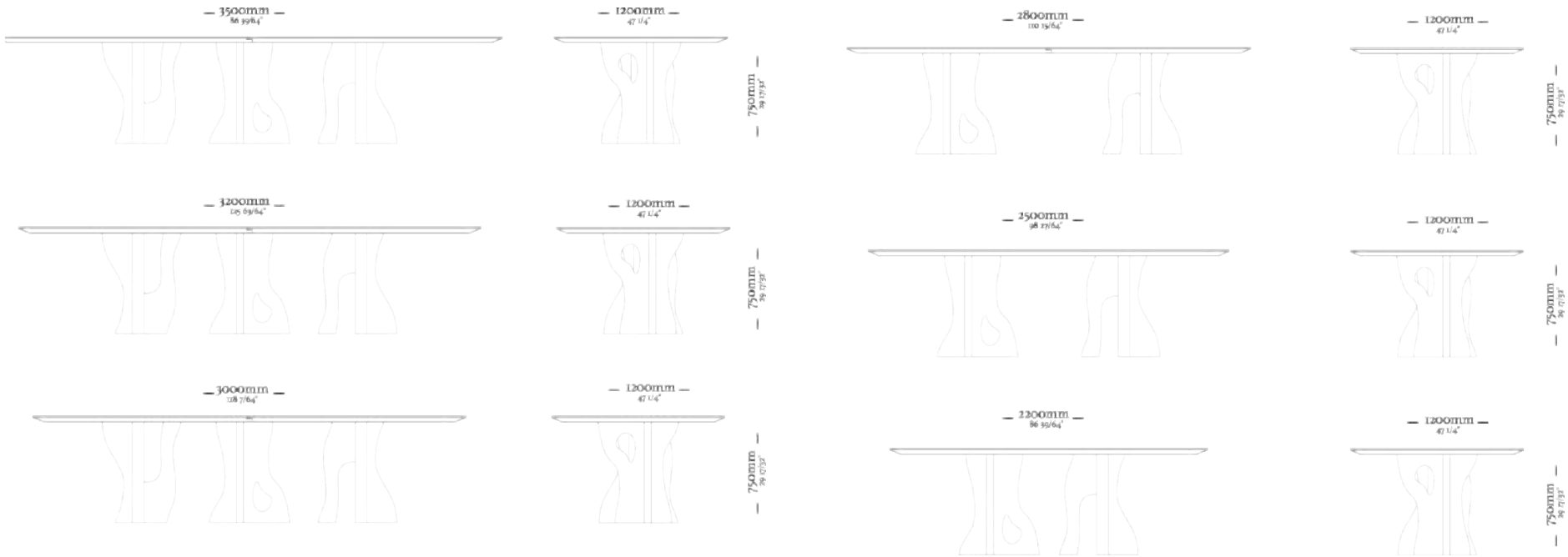
3500mm
86 39/64"
1200mm
47 1/4"
750mm
29 17/32"
2800mm
110 15/64"
1200mm
47 1/4"
750mm
29 17/32"
3200mm
125 59/64"
1200mm
47 1/4"
750mm
29 17/32"
2500mm
98 27/64"
1200mm
47 1/4"
750mm
29 17/32"
3000mm
118 7/64"
1200mm
47 1/4"
750mm
29 17/32"
2200mm
86 39/64"
1200mm
47 1/4"
750mm
29 17/32"

NEON

FORK

NEON

FORK

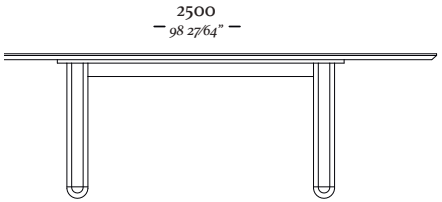
2500
98 27/64"

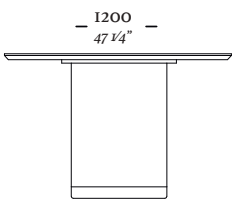
1200
47 1/4"

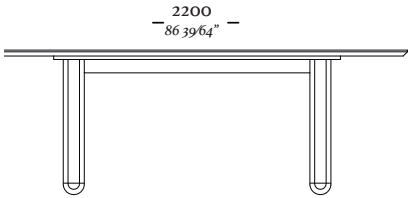
2200
86 39/64"

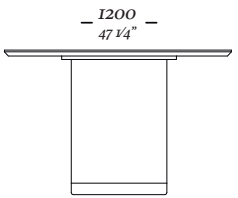
1200
47 1/4"

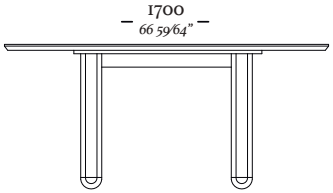
1700
66 59/64"

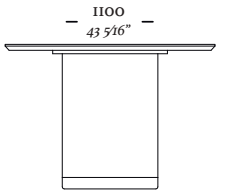
1100
43 5/16"

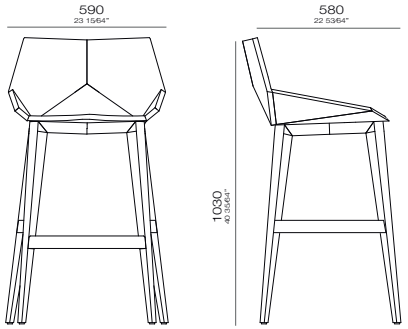
590
23 15/64"
580
22 53/64"
1030
40 33/64"

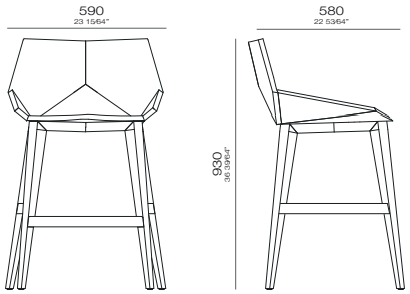
590
23 15/64"
580
22 53/64"
930
36 39/64"

LUCE

CAPPIO

CAPPIO

LUCE

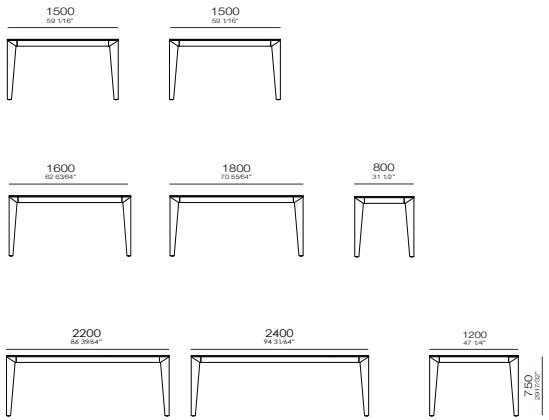
1500
59 1/16"
1500
59 1/16"
1600
62 63/64"
1800
70 55/64"
800
31 1/2"
2200
86 39/64"
2400
94 31/64"
1200
47 1/4"
750
29 17/32"

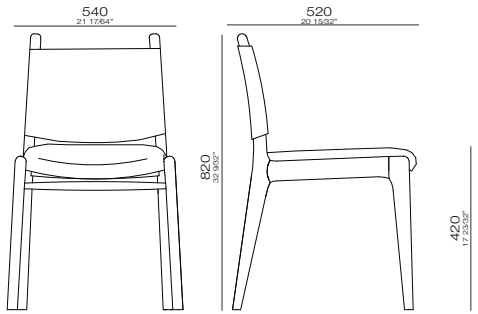
540
21 17/64"
520
20 15/32"
820
32 9/32"
420
17 23/32"

RADI

RADI

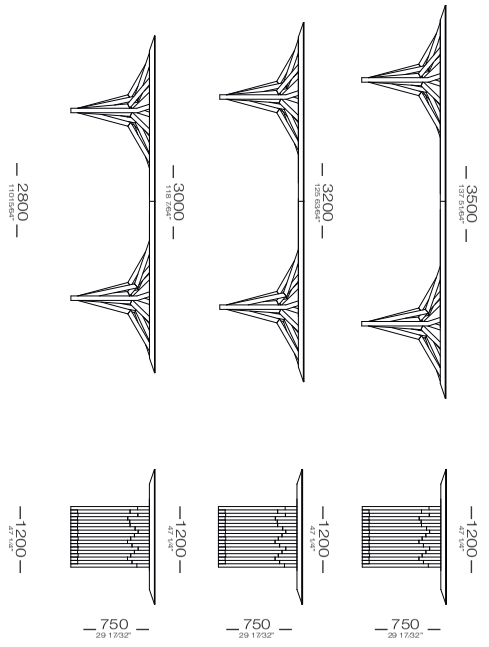
3500
137 51/64"
3200
126 63/64"
3000
118 1/8"
2800
110 15/64"
1200
47 1/4"
750
29 17/32"

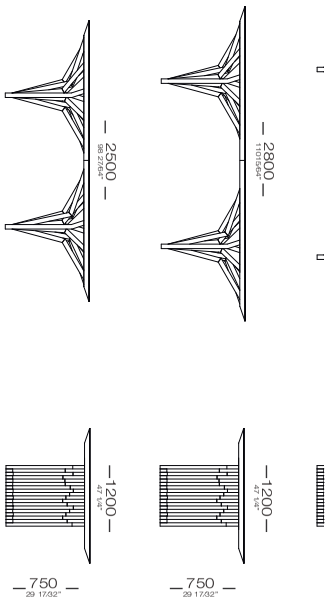
2800
110 15/64"
2500
98 27/64"
1200
47 1/4"
750
29 17/32"

P I N

PIN

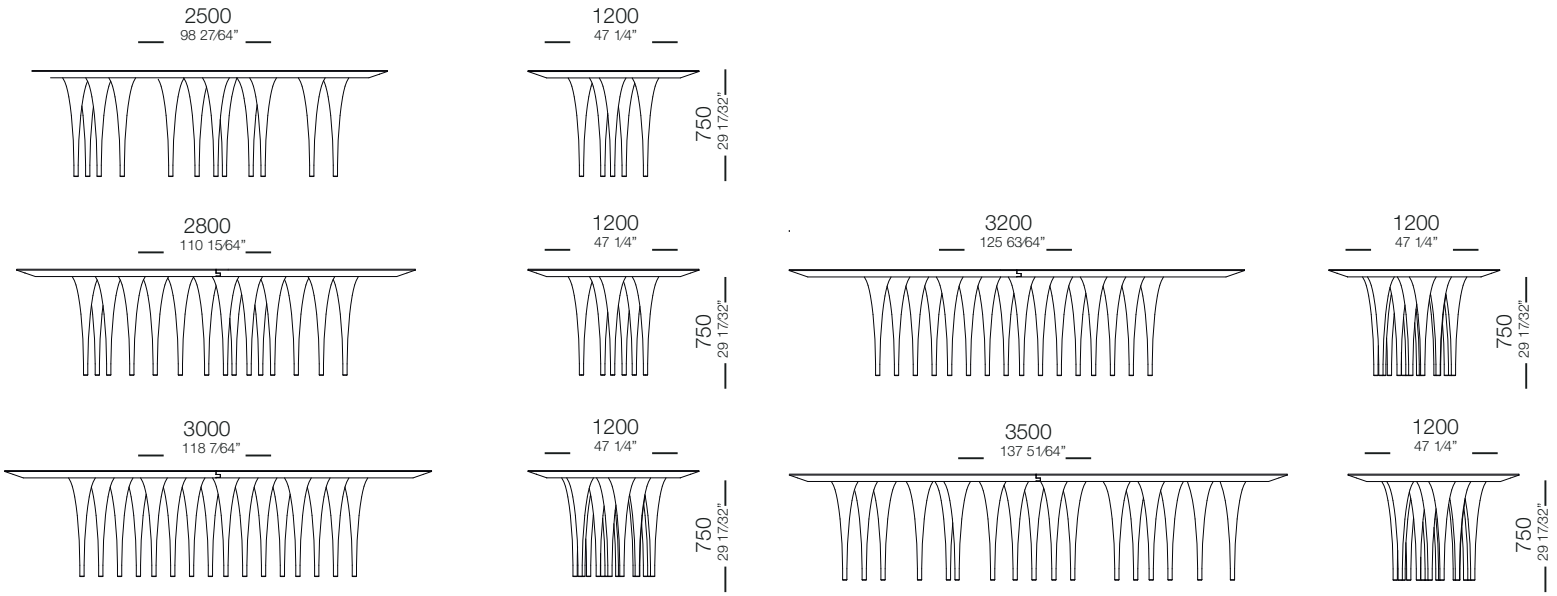
2500
98 27/64"
1200
47 1/4"
750
29 17/32"
2800
110 15/64"
1200
47 1/4"
750
29 17/32"
3200
125 63/64"
1200
47 1/4"
750
29 17/32"
3000
118 7/64"
1200
47 1/4"
750
29 17/32"
3500
137 51/64"
1200
47 1/4"
750
29 17/32"

WING

WING

SHELL

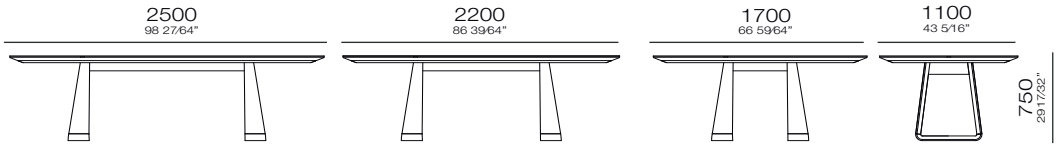
2500
98 27/64"
2200
86 39/64"
1700
66 59/64"
1100
43 5/16"
750
29 17/32"

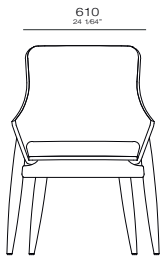
610
24 1/64"

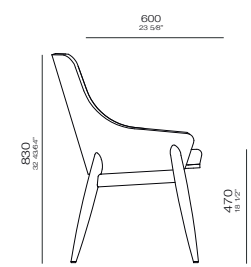
600
23 5/8"
830
32 43/64"
470
18 1/2"

DÁBLIO

SLIT

DÁBLIO

SLIT

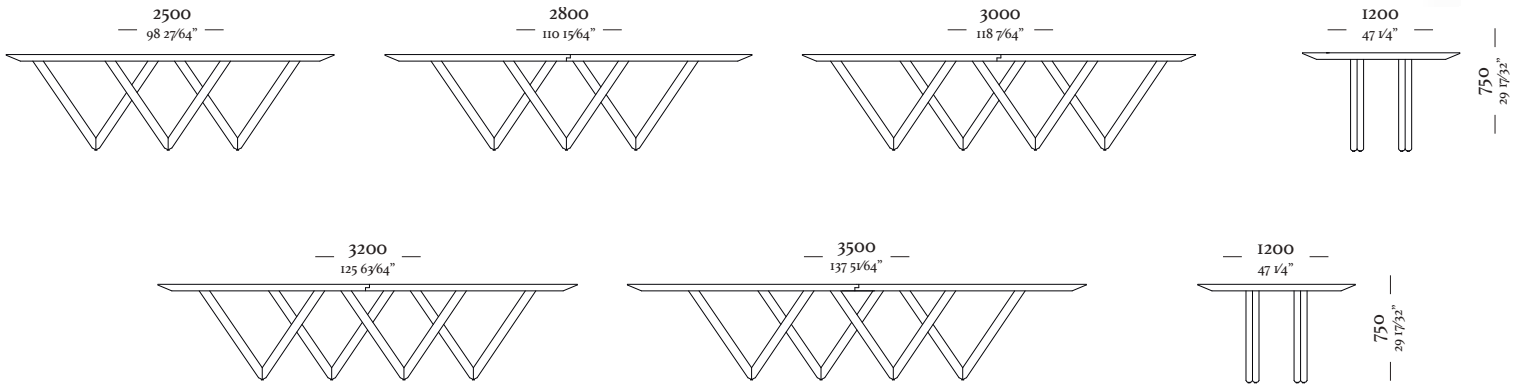
2500
98 27/64"
2800
110 15/64"
3000
118 7/64"
1200
47 1/4"
750
29 17/32"
3200
125 63/64"
3500
137 51/64"
1200
47 1/4"
750
29 17/32"

M O O N

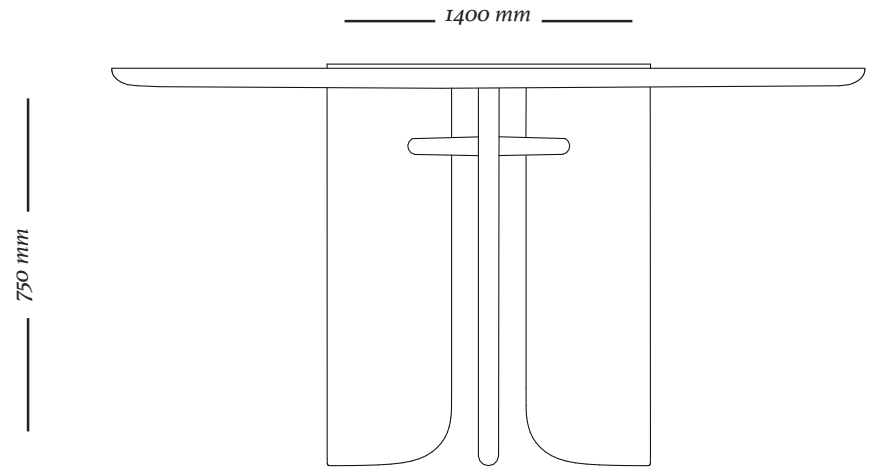

1400x1600x750mm

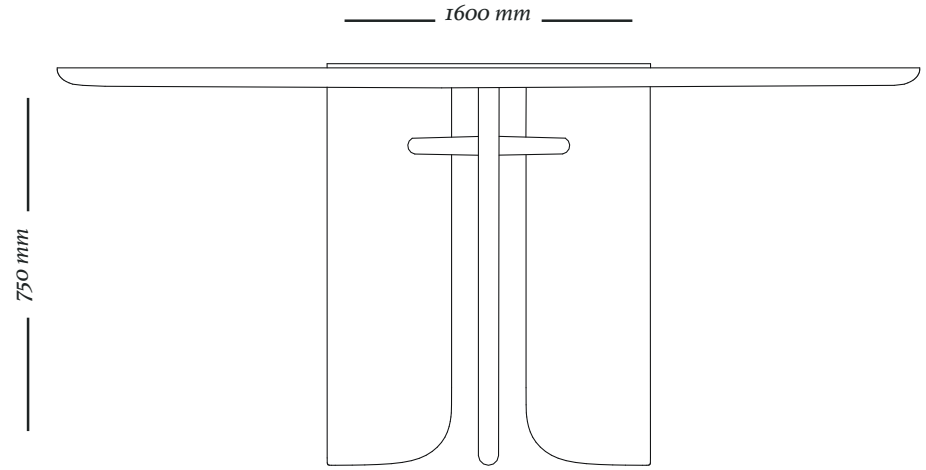

1600x1600x750mm

Dining Chair & Stool

K I C K

KICK

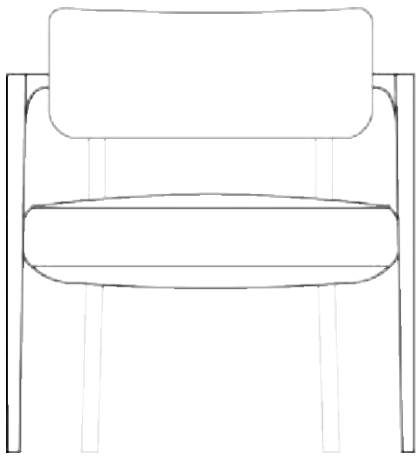

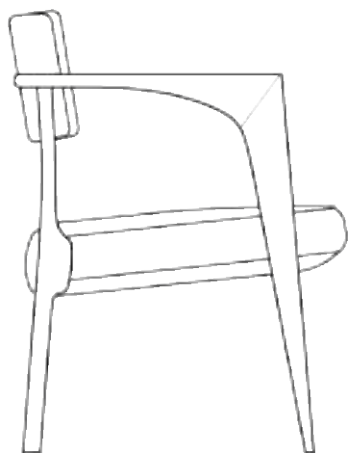

NOWE

NOWE

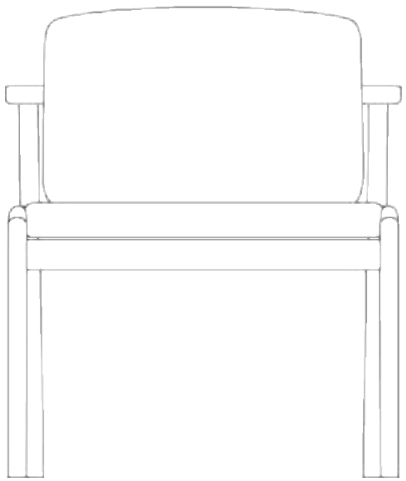

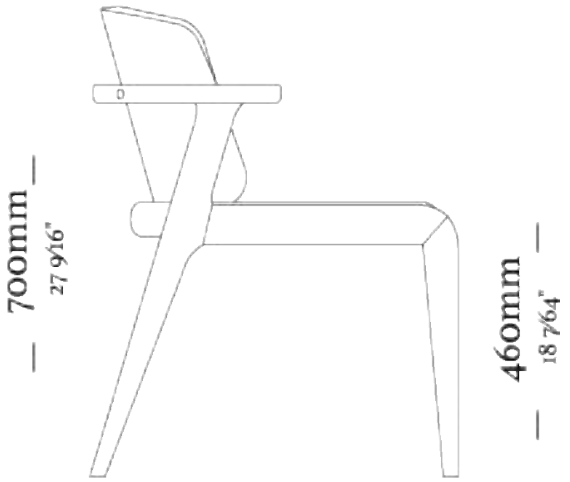

O P Y

OPY

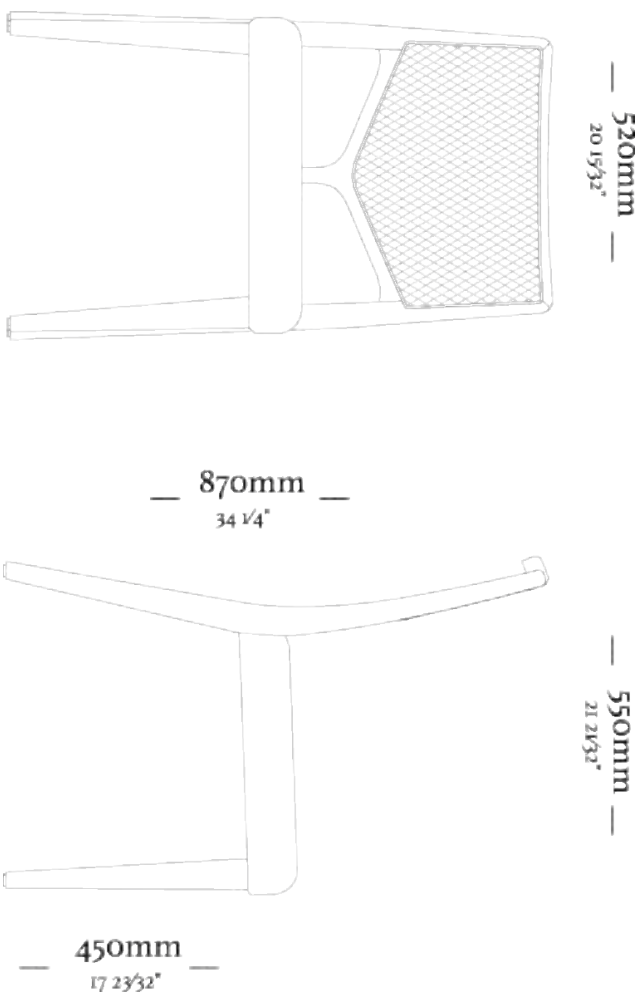

STEMMA

STEMMA

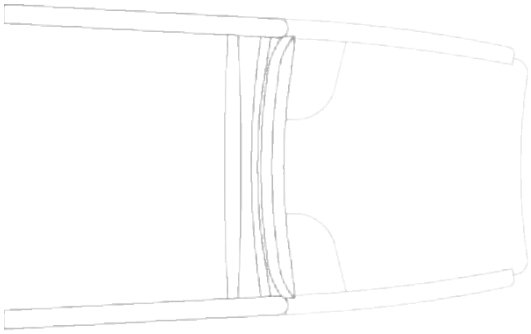

— 840mm —
33 5/64"

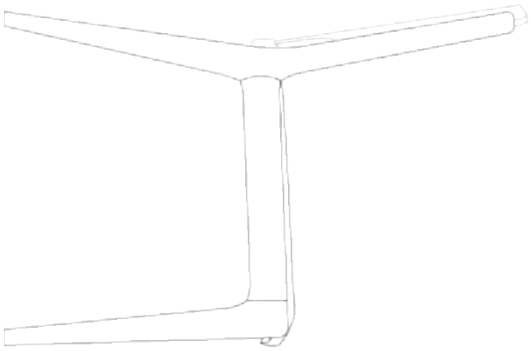

— 480mm —
18 57/64"

— 520mm —
20 15/32"

— 535mm —
21 1/16"

MARU

M A R U

Banqueta alta

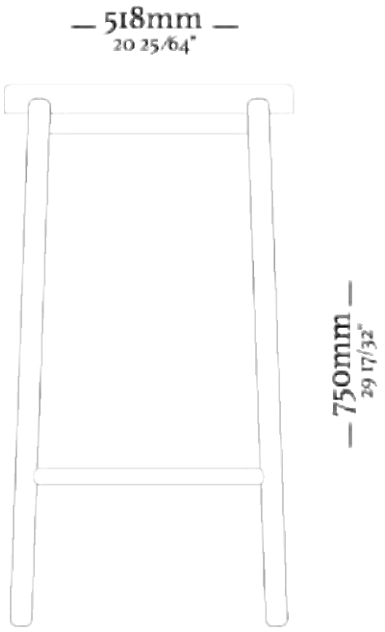

Banqueta baixa

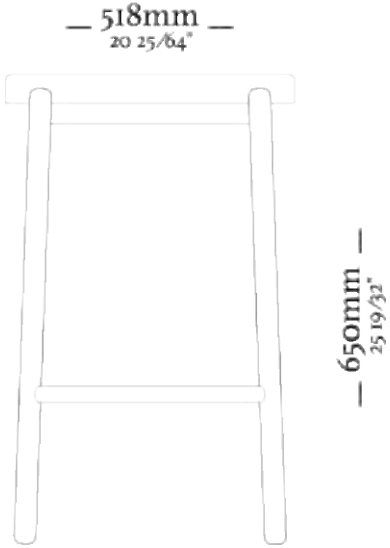

FORK

FORK

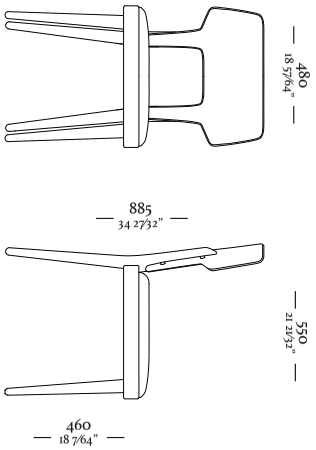

CUBI

CUBI

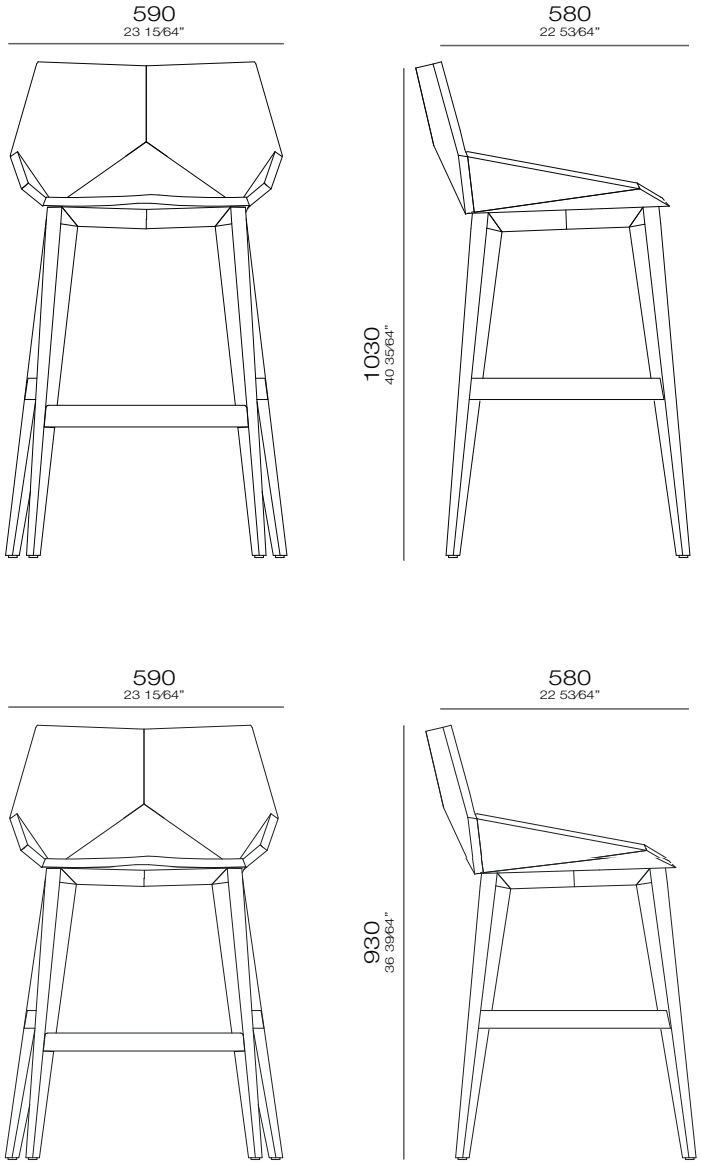
590
23 15⁄64"
580
22 53⁄64"
1030
40 35⁄64"
590
23 15⁄64"
580
22 53⁄64"
930
36 39⁄64"

CUBI

CUBI

RADI

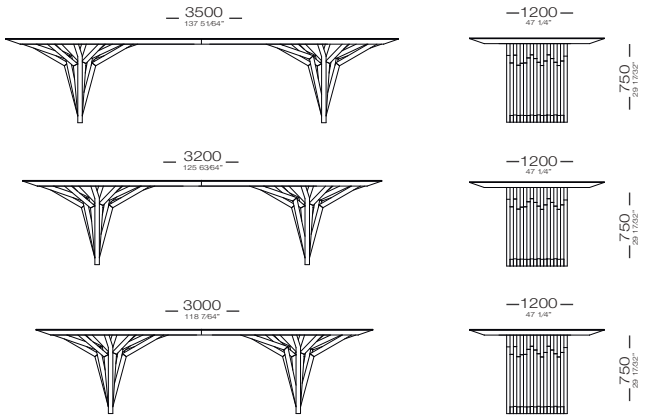
3500
137 51/64"
3200
125 63/64"
3000
118 7/64"
1200
47 1/4"
750
29 17/32"

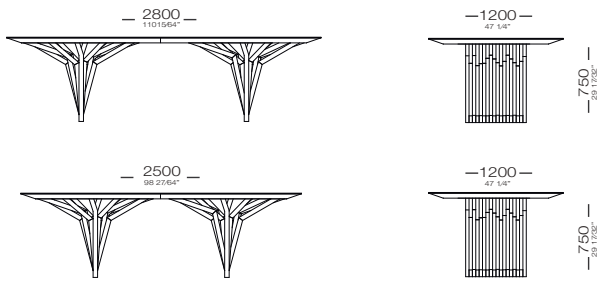
2800
1101/64"
2500
98 27/64"
1200
47 1/4"
750
29 17/32"

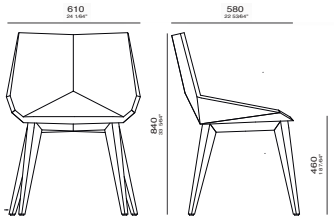
610
24 1/64"
580
22 53/64"
840
33"
460
18 1/4"

STUZI

LETTO

STUZI

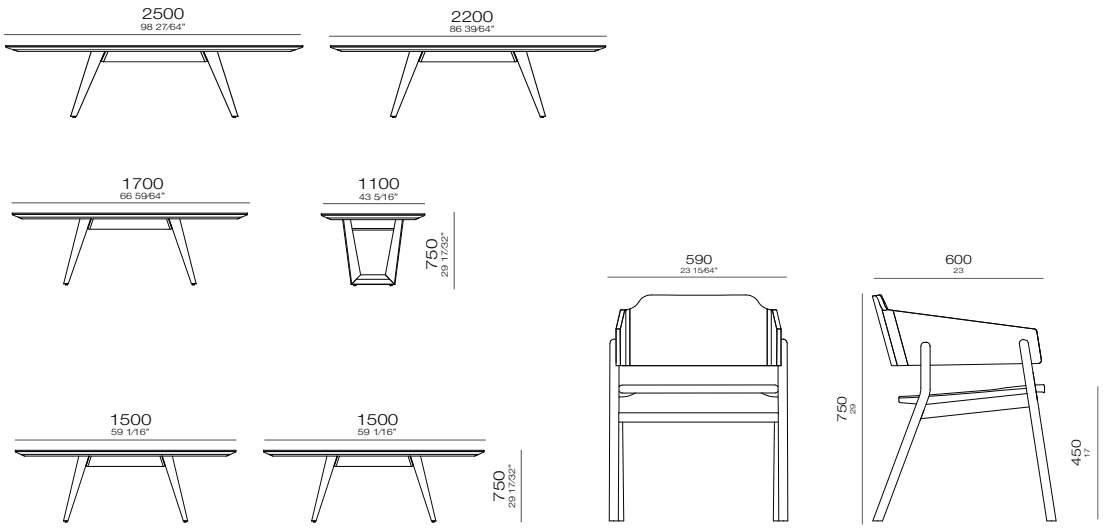
2500
98 27/64"
2200
86 39/64"
1700
66 59/64"
1100
43 5/16"
750
29 17/32"
1500
59 1/16"
1500
59 1/16"
750
29 17/32"
590
23 15/64"
600
23
750
29
450
17

CAPPIO

CAPPIO

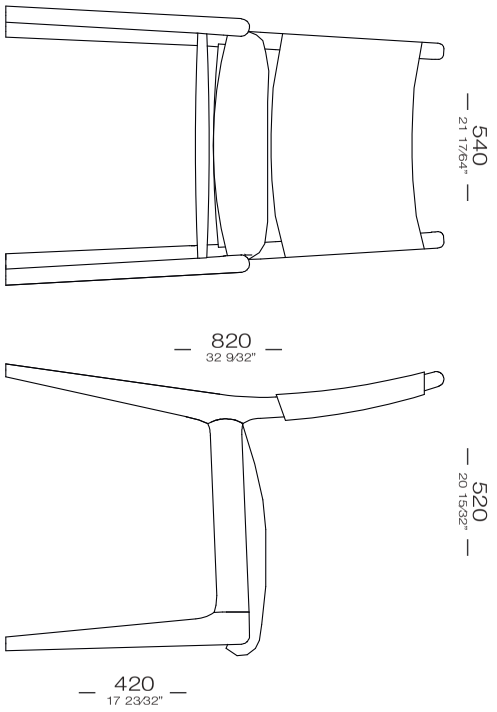

MAT

MAT

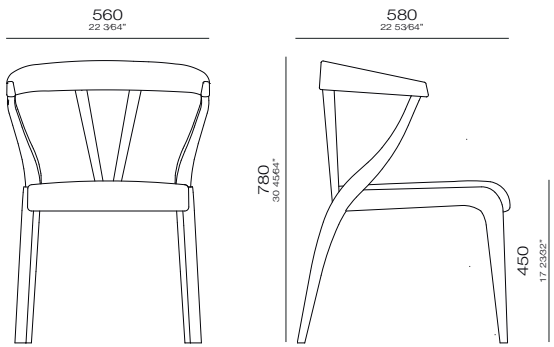

SOTTO

SOTTO

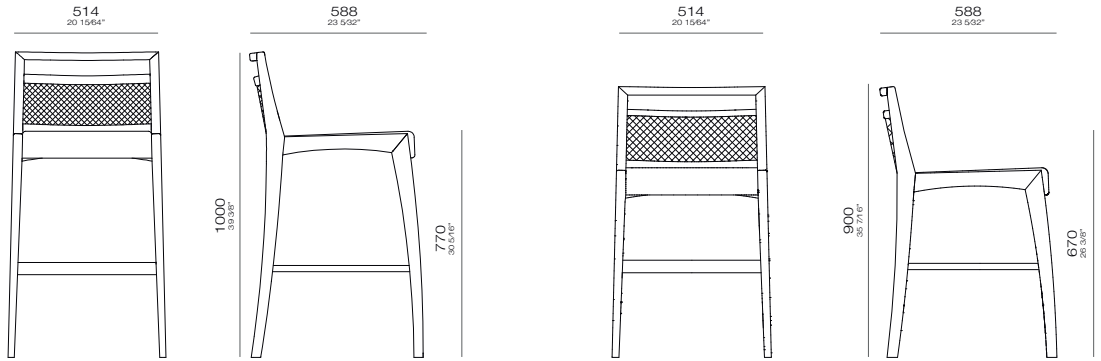
514
20 15/64"
588
23 5/32"
1000
39 3/8"
770
30 5/16"
514
20 15/64"
588
23 5/32"
900
35 7/16"
670
26 3/8"

SOTTO

SOTTO

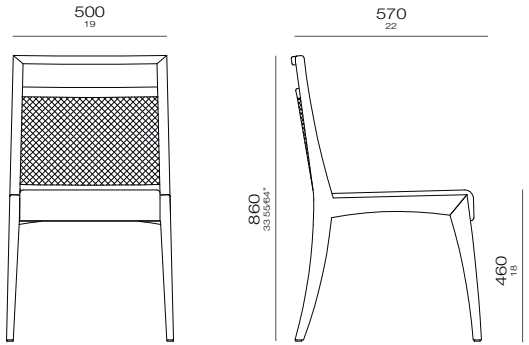

SLIT

S L I T

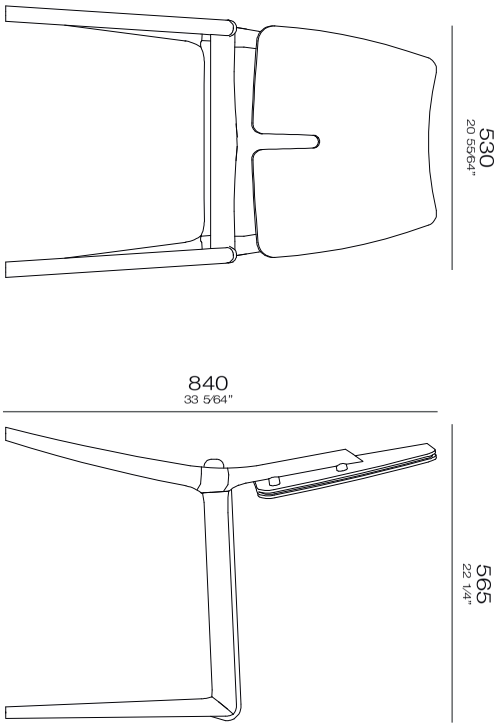

SHELL

SHELL

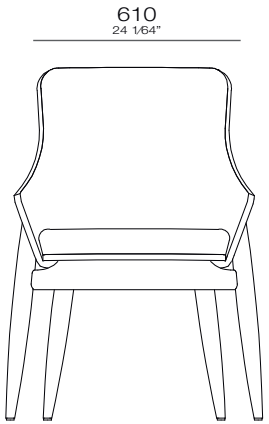

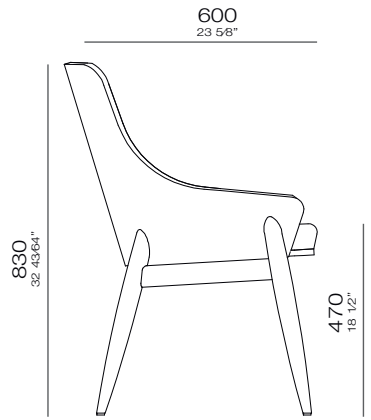

BONE

BONE

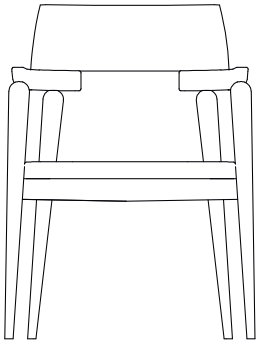

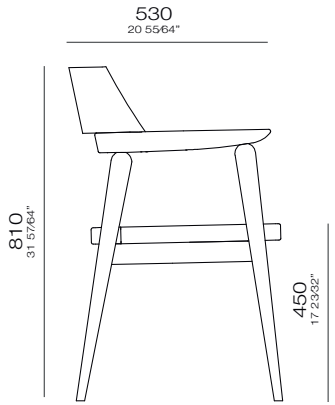

TRESS

TRESS

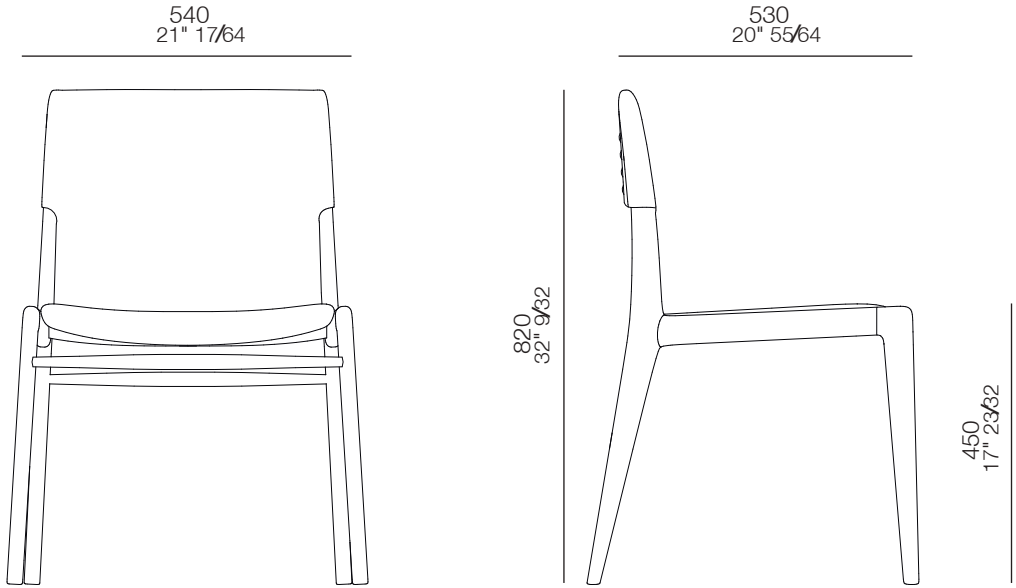

Occasional & Chaise

M U L E

MULE

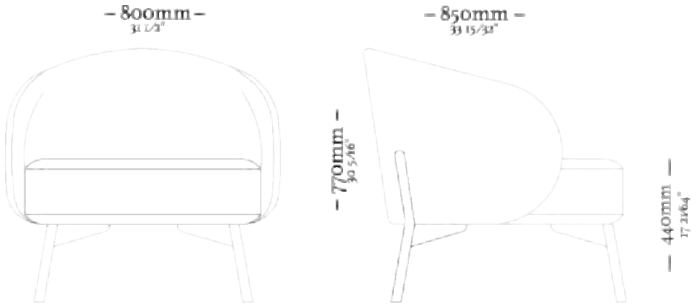

Poltrona com
pés de madeira

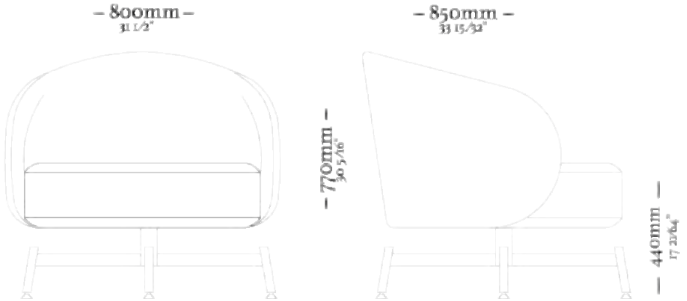

Poltrona giratória

CLAVE

CLAVE

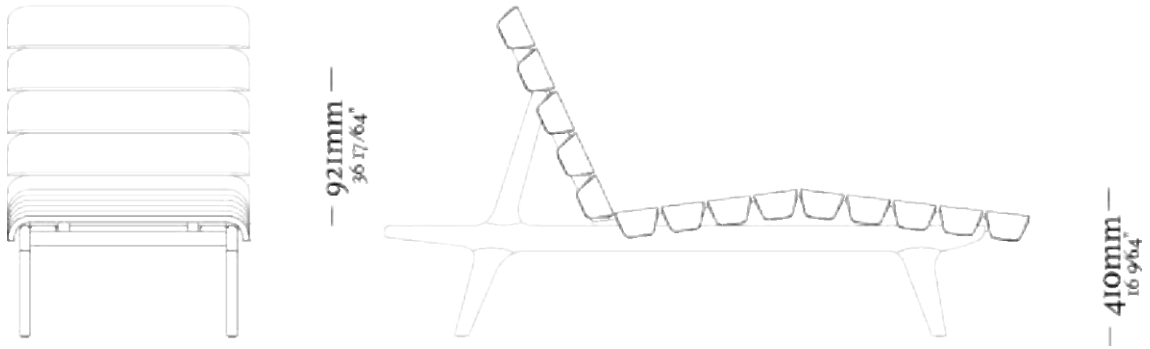

BUSTO

BUSTO

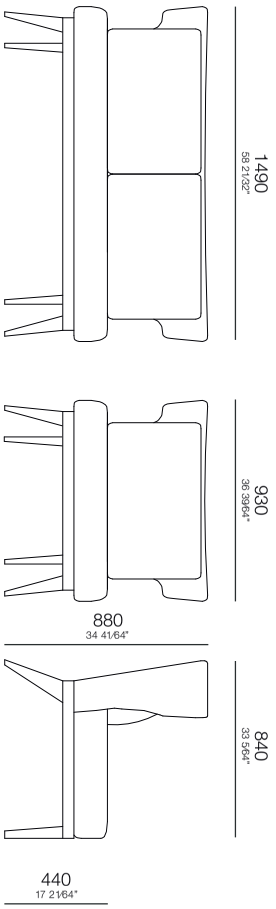

ATHOS

ATHOS

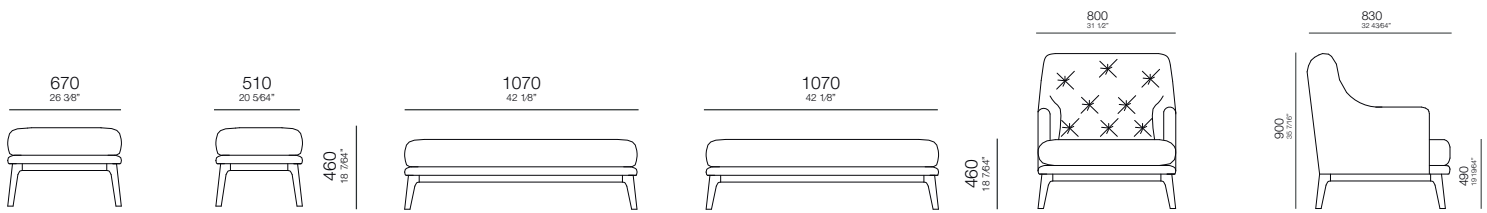
670
26 3/8"
510
20 5/64"
460
18 7/64"
1070
42 1/8"
1070
42 1/8"
460
18 7/64"
800
31 1/2"
830
32 43/64"
900
35 7/16"
490
19 19/64"

ADELE

MINCE

MINCE

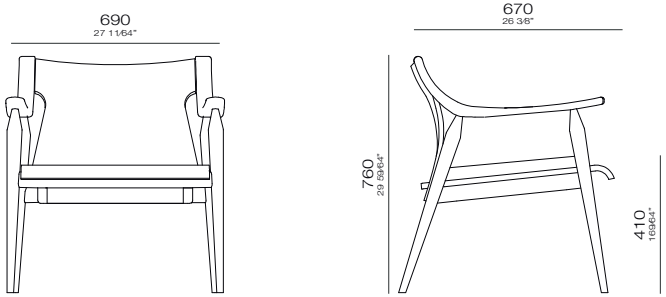

ABRA

A B R A

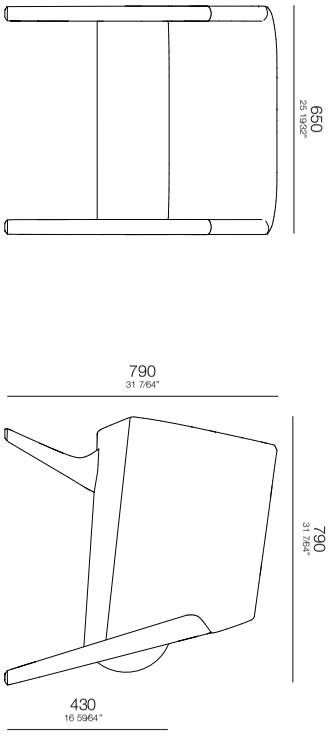

TREND

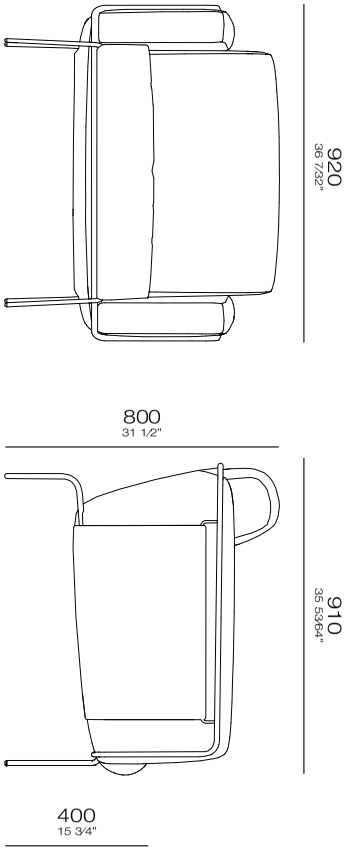

B E L L A

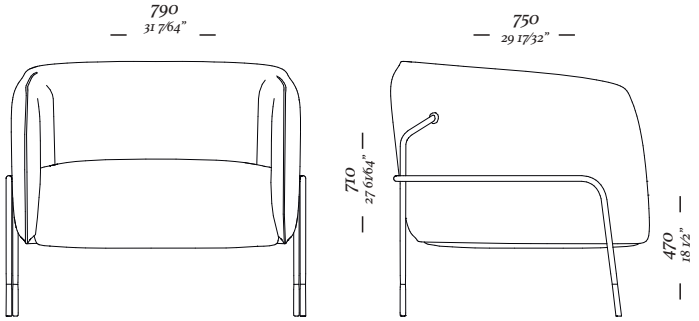

Poltrona
790x750x 710 mm

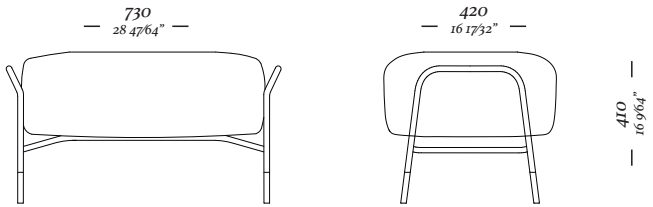

Banqueta
730x420x410 mm

VELO

VELO

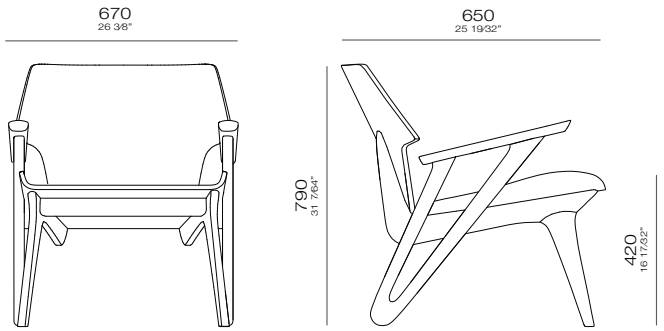

OSA

OSA

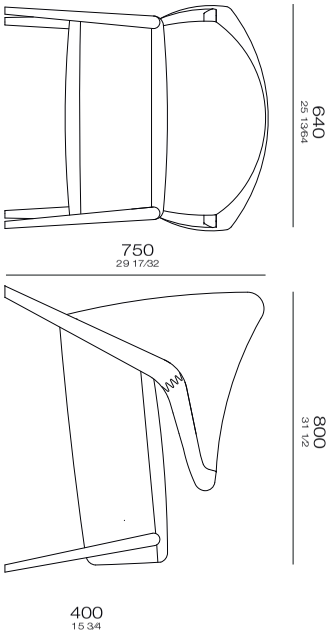

W I N

WIN

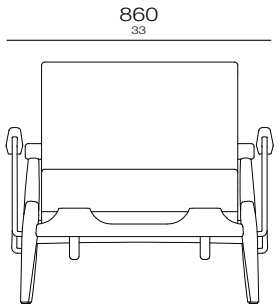

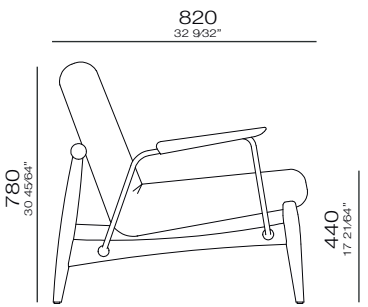

T A I

TAI

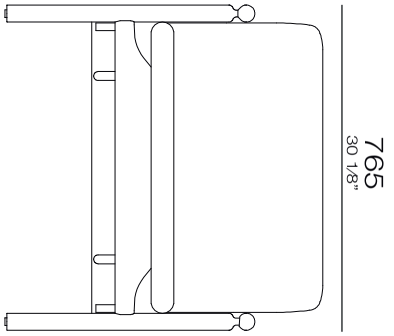

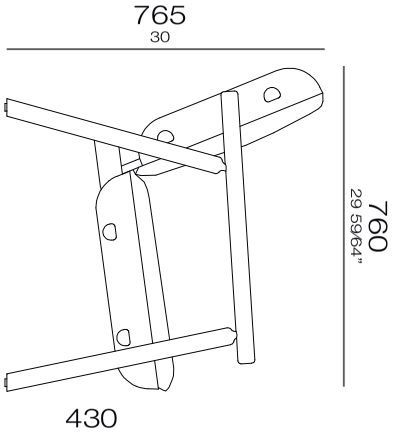

SOHO

SOHO

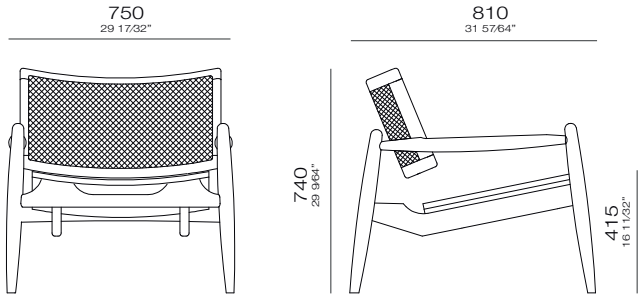

T U R N

TURN

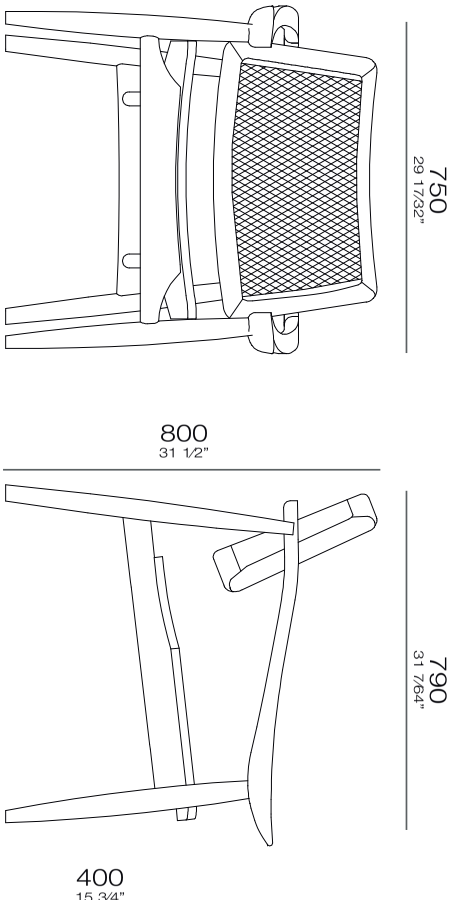

F A N E

FANE

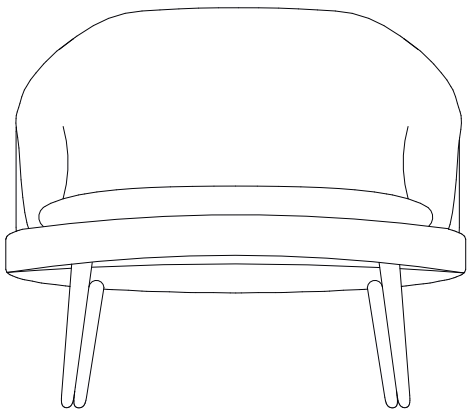

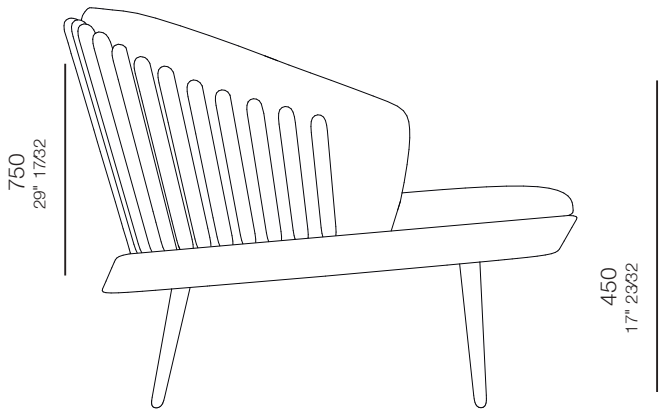

MAIA

WAVE

WAVE

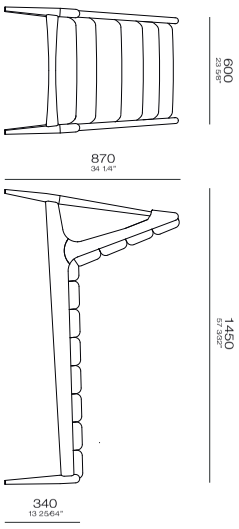

Coffee Table & End Table

PAN

PAN

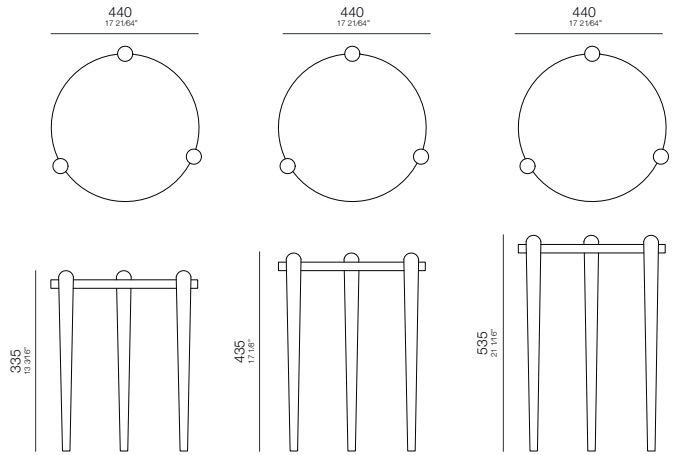
440
17 21/64"
440
17 21/64"
440
17 21/64"
335
13 3/16"
435
17 1/4"
535
21 1/16"

PLOT

PLOT

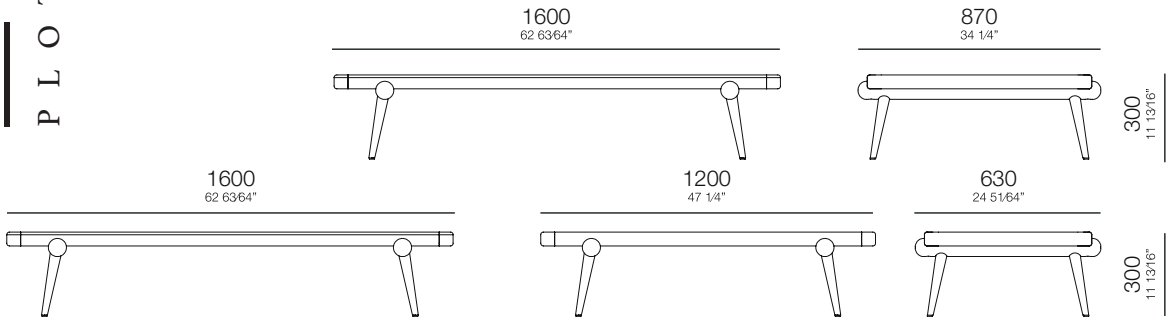
1600
62 63⁄64"
870
34 1⁄4"
300
11 13⁄16"
1600
62 63⁄64"
1200
47 1⁄4"
630
24 51⁄64"
300
11 13⁄16"

ARC

ARC

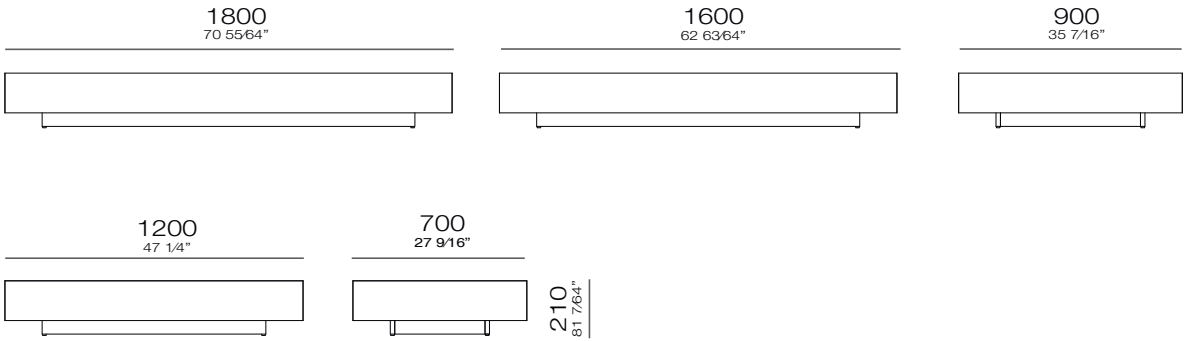
1800
70 55⁄64”
1600
62 63⁄64”
900
35 7⁄16”
1200
47 1⁄4”
700
27 9⁄16”
210
81 7⁄64”

PLATÔ

PLATÔ

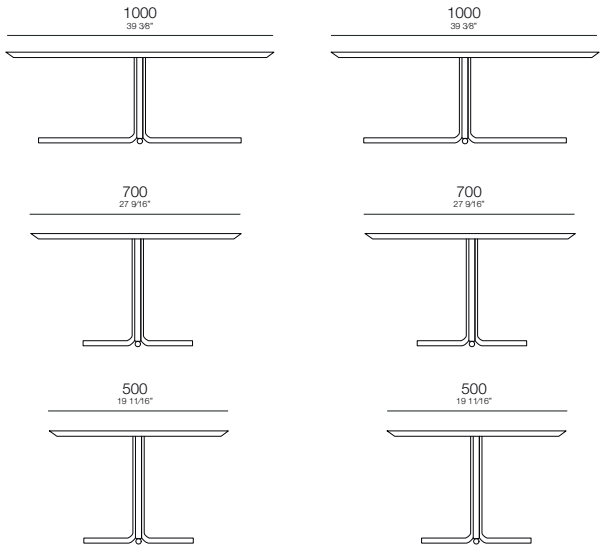
1000
39 3/8"
1000
39 3/8"
700
27 9/16"
700
27 9/16"
500
19 11/16"
500
19 11/16"

RÉGIA

RÉGIA

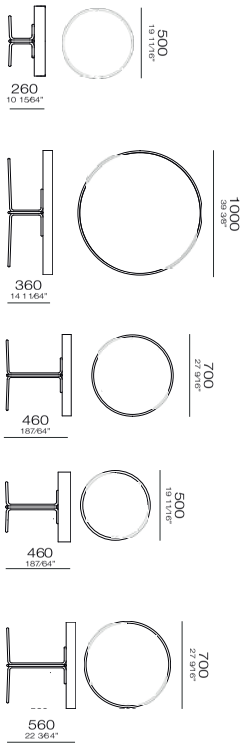
500
19 11/16"
260
10 15/64"
1000
39.3/8"
360
14 1 1/64"
700
27.9/16"
460
187/64"
500
19 11/16"
460
187/64"
700
27.9/16"
560
22 3/64"

F E N I

FENI

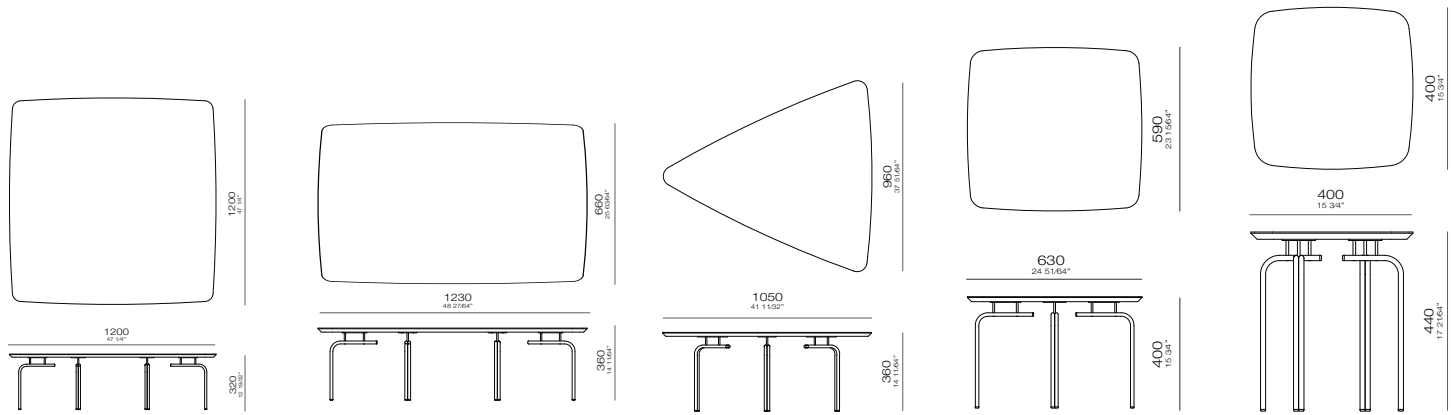
1200
47 1/4"
320
12 19/32"
1230
48 27/64"
660
26 1/64"
360
14 11/64"
1050
41 11/32"
960
37 51/64"
630
24 51/64"
590
23 7/64"
400
15 3/4"
400
15 3/4"
440
17 21/64"

LIKE

LIKE

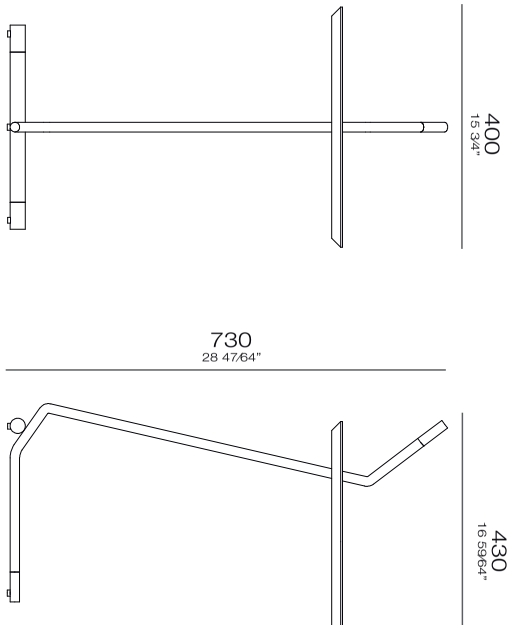

F R A M E

FRAME

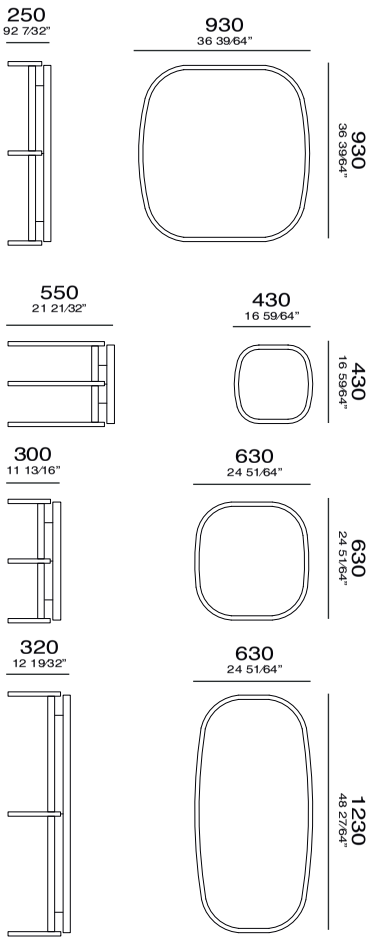
250
92 7/32"
930
36 39/64"
930
36 39/64"
550
21 21/32"
430
16 59/64"
430
16 59/64"
300
11 13/16"
630
24 51/64"
630
24 51/64"
320
12 19/32"
630
24 51/64"
1230
48 27/64"

CLAN

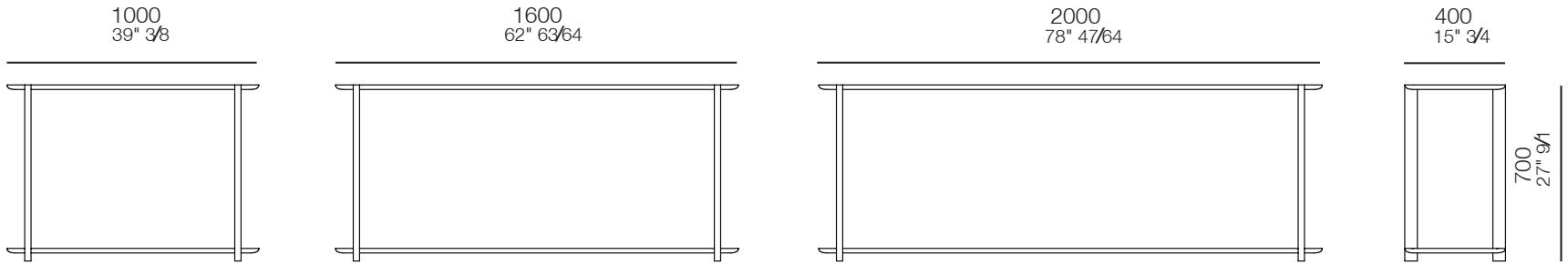
1000
39" 3/8
1600
62" 63/64
2000
78" 47/64
400
15" 3/4
700
27" 9/1

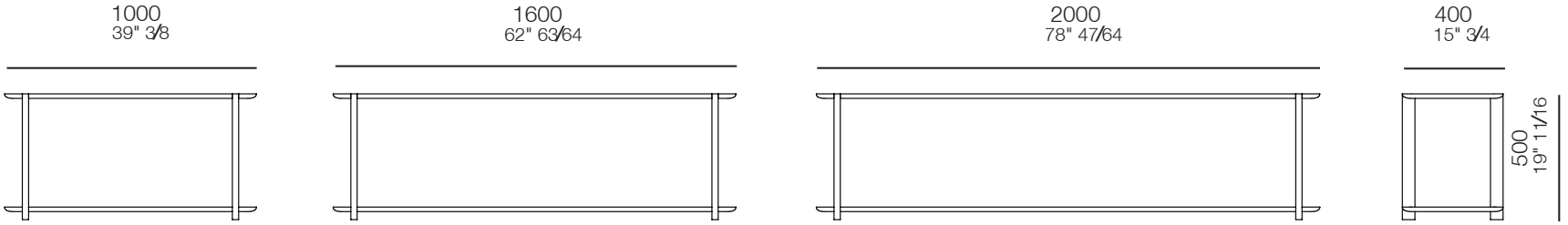
1000
39" 3/8
1600
62" 63/64
2000
78" 47/64
400
15" 3/4
500
19" 11/16

CLAN

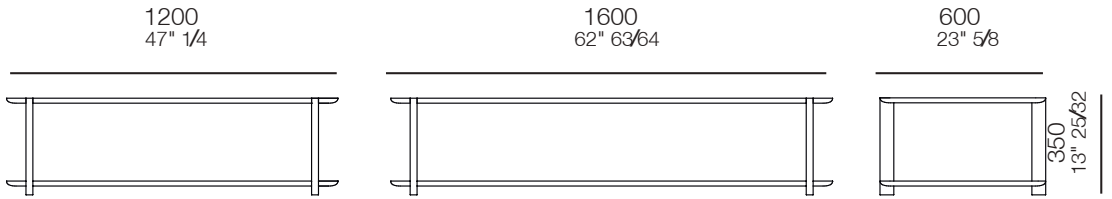
1200
47" 1/4
1600
62" 63/64
600
23" 5/8
350
13" 25/32

Sideboard, Console & Cabinet

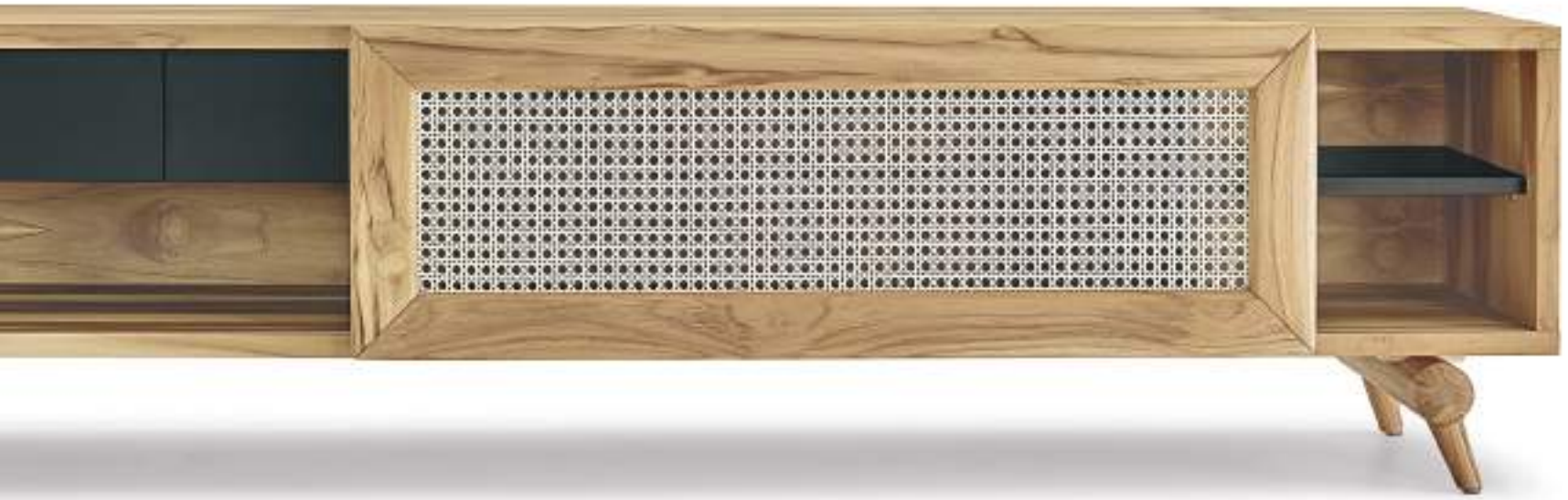

F L O W

F L O W

FLOW

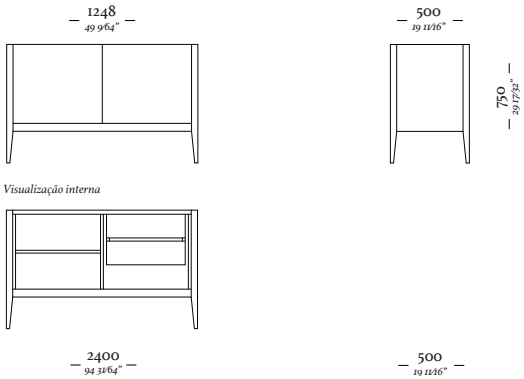
1248
49 9/64"
500
19 11/16"
750
29 17/32"
Visualização interna
2400
94 31/64"
500
19 11/16"

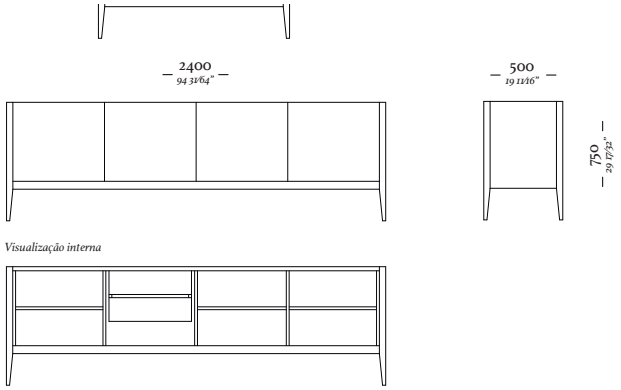
2400
94 31/64"
500
19 11/16"
750
29 17/32"
Visualização interna

FLOW

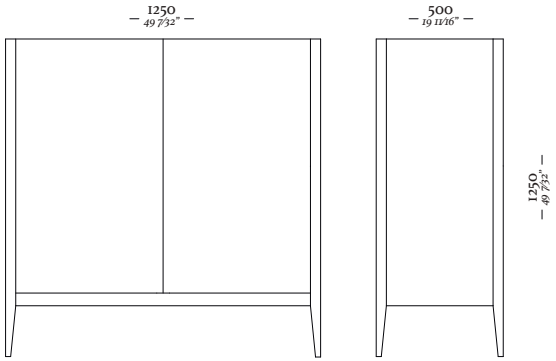

Visualização interna

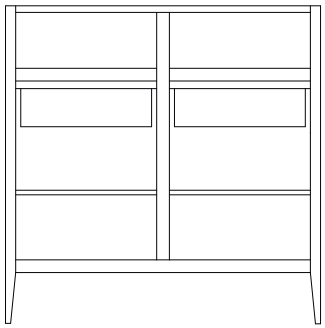

PLOT

PLOT

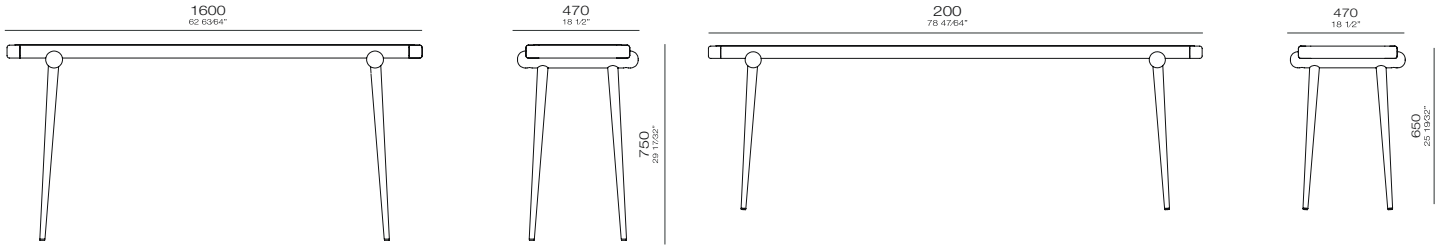
1600
62 63/64"
470
18 1/2"
750
29 17/32"
200
78 47/64"
470
18 1/2"
650
25 19/32"

PLOT

PLOT

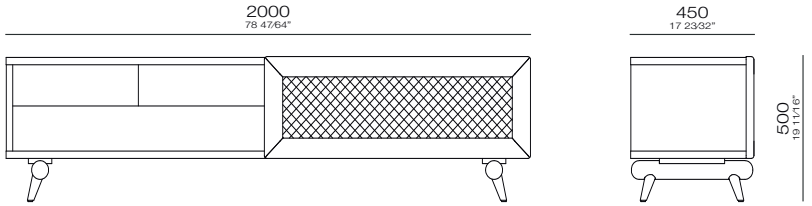

SQUARE

SQUARE

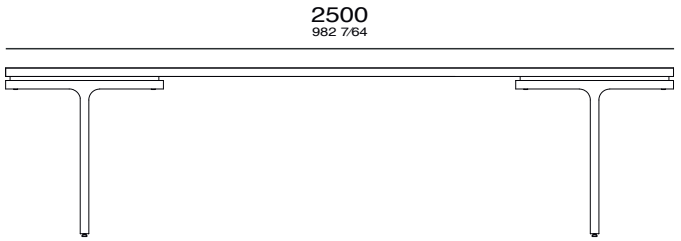

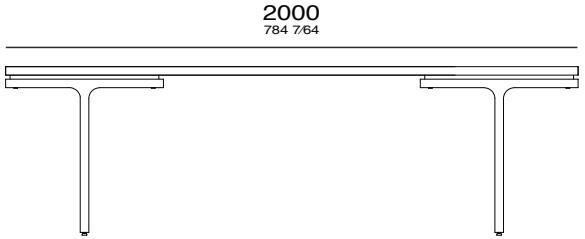

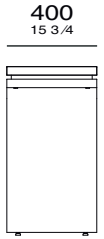

Y P I S

YPIS

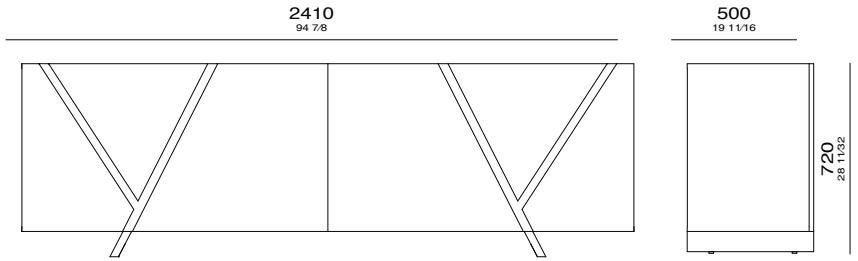

M A S P

M A S P

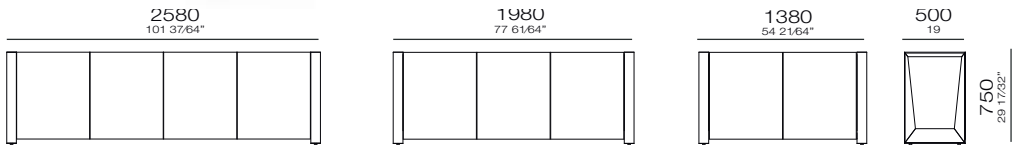

Upholstered

CONNECT

CONNECT

CONNECT

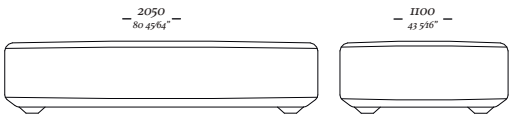

Módulo
2050 x 1100 x 450mm

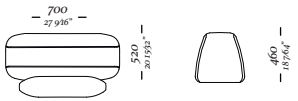

Encosto Solto 700
C/ 01 Almofada
900 x 520 x 460mm

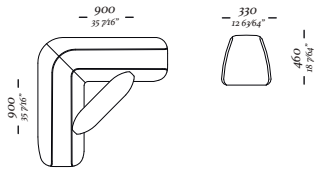

Encosto Solto Canto 90º
C/ 01 Almofada
900 x 900 x 460mm

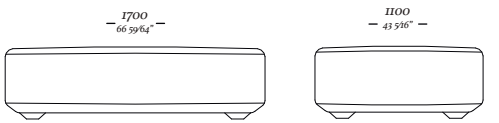

Módulo
1700 x 1100 x 450mm

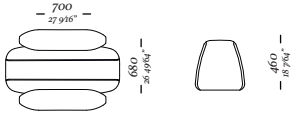

Encosto Solto 700
C/ 02 Almofadas
900 x 680 x 460mm

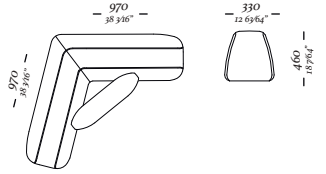

Encosto Solto Canto 101º
C/ 01 Almofada
970 x 970 x 460mm

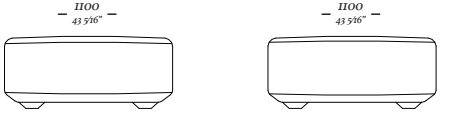

Módulo
1100 x 1100 x 450mm

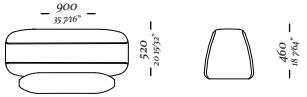

Encosto Solto 900
C/ 01 Almofada
900 x 520 x 460mm

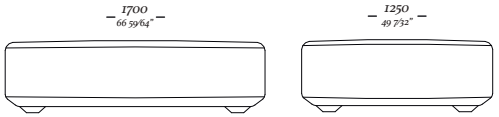

Módulo
2050 x 1250 x 450mm

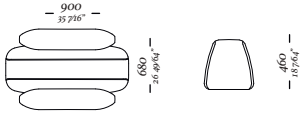

Encosto Solto 900
C/ 02 Almofadas
900 x 680 x 460mm

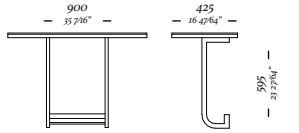

Mesa de apoio
Tampo laminado reto
900 x 425 x 595mm

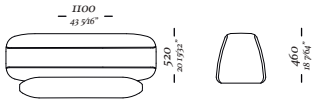

Encosto Solto 1100
C/ 01 Almofada
1100 x 520 x 460mm

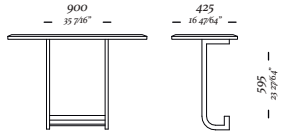

Mesa de apoio
Tampo laqueado chanfrado
900 x 425 x 595mm

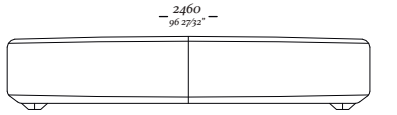

Módulo 101º
2460 x 1320 x 450mm

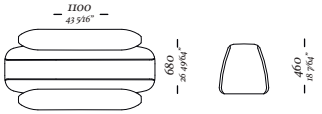

Encosto Solto 1100
C/ 02 Almofadas
1100 x 680 x 460mm

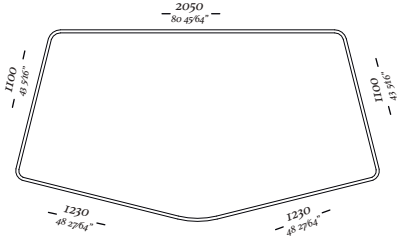

C L I P

CLIP

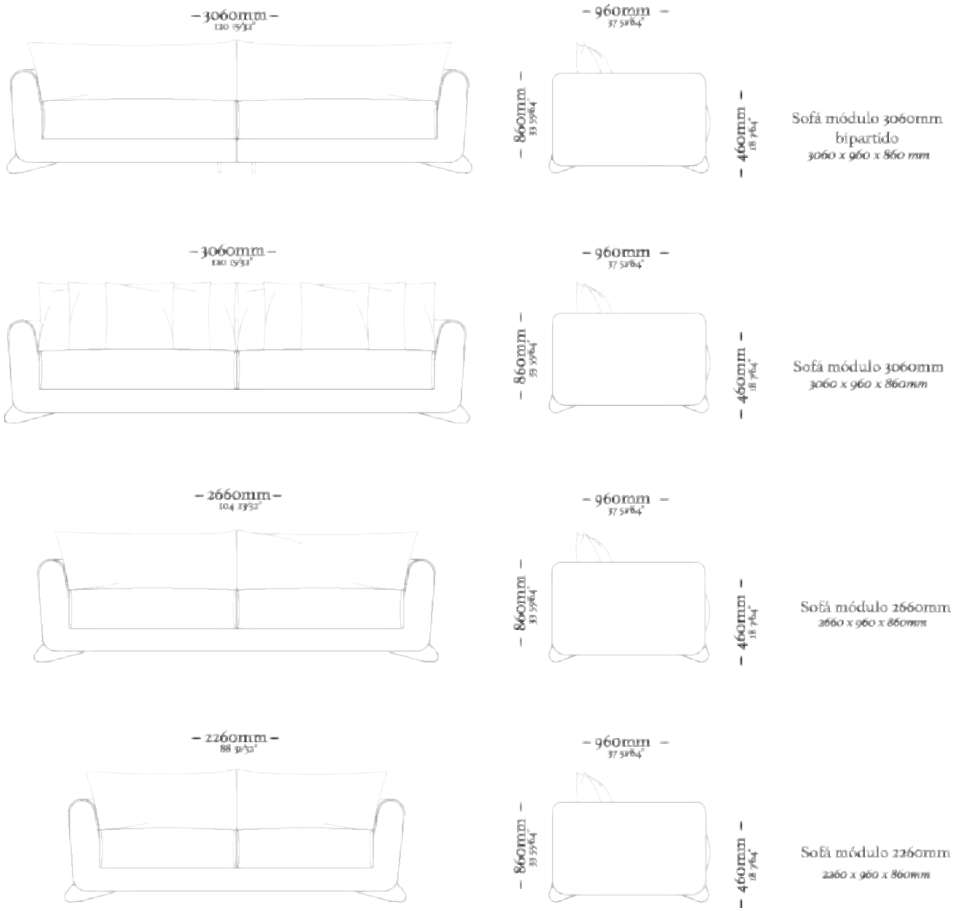
– 3060mm –
130 15/32"
– 960mm –
37 51/64"
– 860mm –
33 59/64"
– 460mm –
18 1/64"
Sofá módulo 3060mm
bipartido
3060 x 960 x 860 mm
– 3060mm –
130 15/32"
– 960mm –
37 51/64"
– 860mm –
33 59/64"
– 460mm –
18 1/64"
Sofá módulo 3060mm
3060 x 960 x 860mm
– 2660mm –
104 19/32"
– 960mm –
37 51/64"
– 860mm –
33 59/64"
– 460mm –
18 1/64"
Sofá módulo 2660mm
2660 x 960 x 860mm
– 2260mm –
88 31/32"
– 960mm –
37 51/64"
– 860mm –
33 59/64"
– 460mm –
18 1/64"
Sofá módulo 2260mm
2260 x 960 x 860mm

DROOP

DROOP

4 Lugares
2900 x 980 x 900mm

3 Lugares
2400 x 980 x 900mm

Poltrona
1050 x 980 x 900mm

GRIND

GRIND

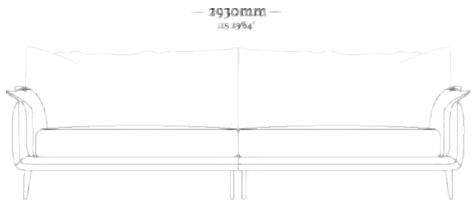

Sofá 4 lugares C/ 2 br
Bipartido
2930 x 1040 x 910 mm

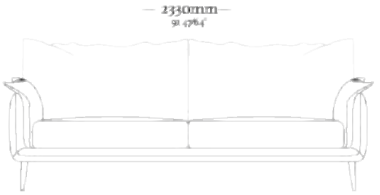

Sofá 3 lugares C/ 2 br
2330 x 1040 x 910 mm

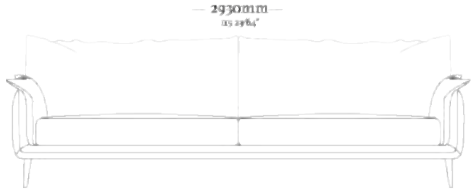

Sofá 4 lugares C/ 2 br
2930 x 1040 x 910 mm

Poltrona C/ 1 br
1100 x 1040 x 910 mm

SAVON

SAVON

– 900mm –
35 7/16"
– 940mm –
37 1/64"
– 850mm –
33 15/32"
– 440mm –
17 21/64"
Mod. S/Br. Ass 900mm
900 x 940 x 850mm
– 1100mm –
43 5/16"
– 970mm –
38 3/16"
– 850mm –
33 15/32"
– 440mm –
17 21/64"
Mod. C/ 1 Br. Ass. 900mm
1100 x 970 x 850mm
– 1100mm –
43 5/16"
– 940mm –
37 1/64"
– 850mm –
33 15/32"
– 440mm –
17 21/64"
Mod. S/Br. Ass. 1100mm
1100 x 940 x 850mm
– 1300mm –
51 3/16"
– 970mm –
38 3/16"
– 850mm –
33 15/32"
– 440mm –
17 21/64"
Mod. C/ 1 Br. Ass. 1100mm
1300 x 970 x 850mm
– 1300mm –
51 3/16"
– 970mm –
38 3/16"
– 850mm –
33 15/32"
– 440mm –
17 21/64"
Poltrona
1300 x 970 x 850mm
– 1100mm –
43 3/16"
– 1630mm –
64 5/64"
– 850mm –
33 15/32"
– 440mm –
17 21/64"
Cheise C/1 Br. Ass. 900
1100 x 1630 x 850

KOLO

KOLO

H I G H

HIGH

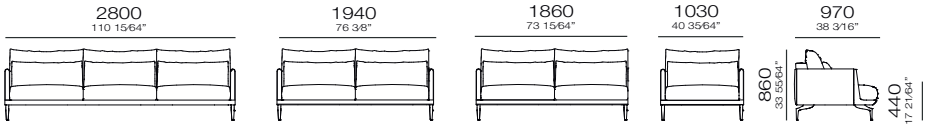

Sofá 4 Lugares
C/ 2 BR

Sofá 3 Lugares
C/ 2 BR

Mod. 3 Lugares
C/ 1BR

POLTRONA
C/ 2 BRs

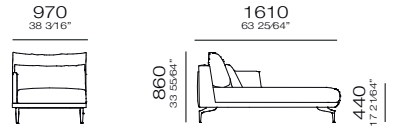

Chaise Longue
C/ BR

S M I L E

SMILE

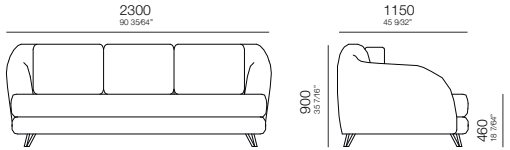

SOFÁ 3 LUGARES
C/ 2 BR

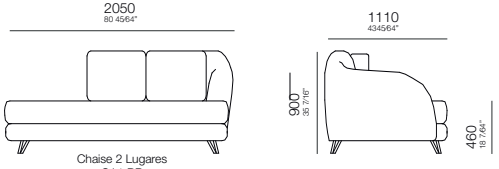

Chaise 2 Lugares
C/ 1 BR

BELT

BELT

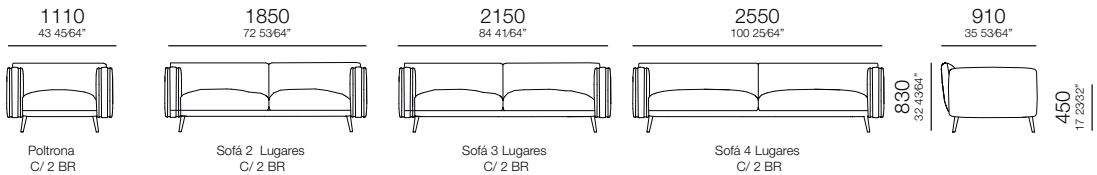
1110
43 45⁄64"
1850
72 53⁄64"
2150
84 41⁄64"
2550
100 25⁄64"
910
35 53⁄64"
830
32 43⁄64"
450
17 23⁄32"
Poltrona
C/ 2 BR
Sofá 2 Lugares
C/ 2 BR
Sofá 3 Lugares
C/ 2 BR
Sofá 4 Lugares
C/ 2 BR

FINE

FINE

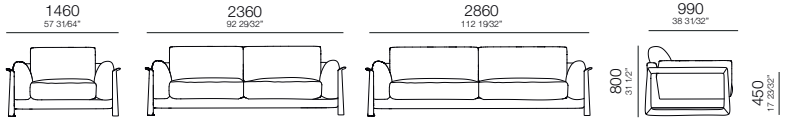
1460
57 31/64"
2360
92 29/32"
2860
112 19/32"
990
38 31/32"
800
31 1/2"
450
17 23/32"
Poltrona
C/ 2 BR C/ Almofada
Sofá 3 LUGARES
C/ 2 BR C/ Almofada
Sofá 4 LUGARES
C/ 2 BR C/ Almofada

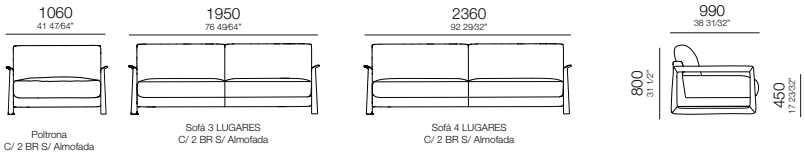
1060
41 47/64"
1950
76 49/64"
2360
92 29/32"
990
38 31/32"
800
31 1/2"
450
17 23/32"
Poltrona
C/ 2 BR S/ Almofada
Sofá 3 LUGARES
C/ 2 BR S/ Almofada
Sofá 4 LUGARES
C/ 2 BR S/ Almofada

AIBY

AIBY

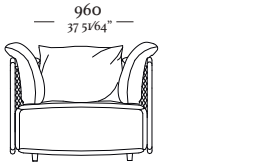

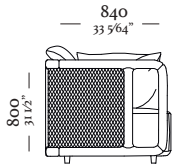

Poltrona c/ 2 braços

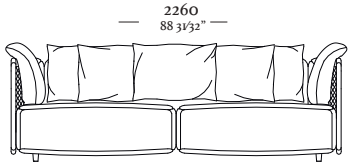

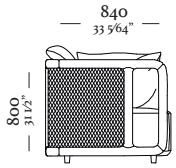

3 Lugares c/ 2 braços

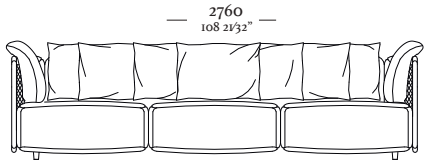

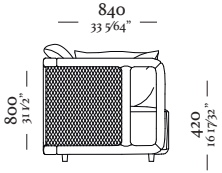

4 Lugares c/2 braços

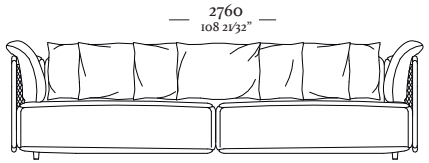

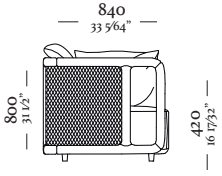

4 Lugares c/2 braços
bipartido

Miscellaneous

CLASS

BONE

CLASS

SHELL

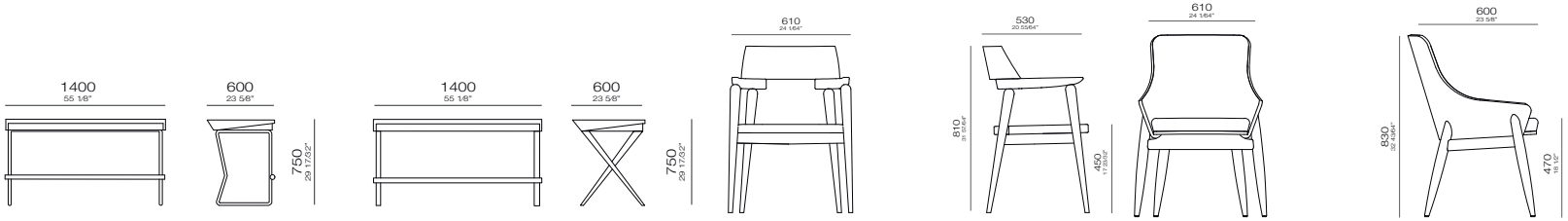
1400
55 1/8"
600
23 5/8"
750
29 17/32"
1400
55 1/8"
600
23 5/8"
750
29 17/32"
610
24 1/64"
530
20 59/64"
810
31 7/8"
450
17 23/32"
610
24 1/64"
600
23 5/8"
830
32 11/64"
470
18 1/2"

WAVE

WAVE

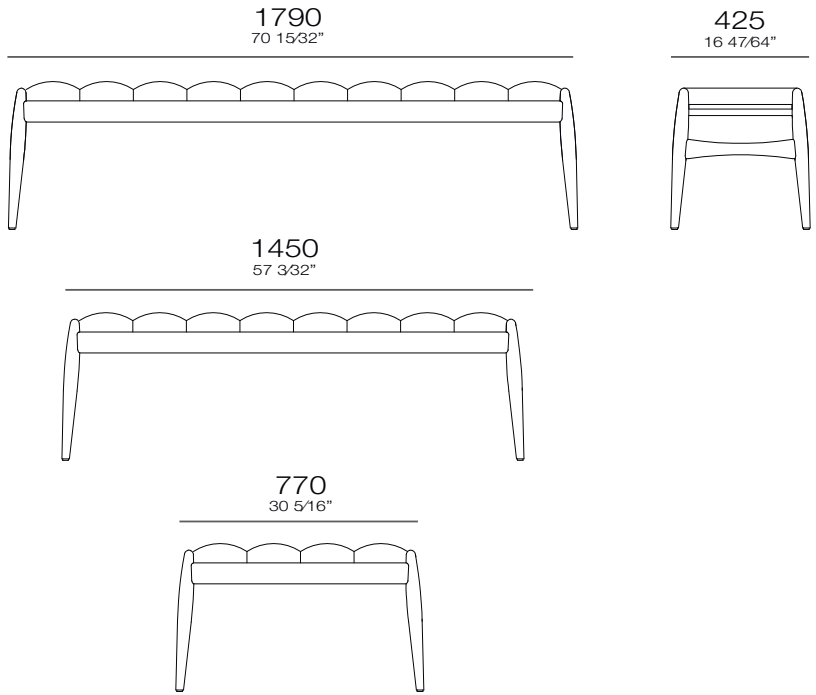

SCANDI

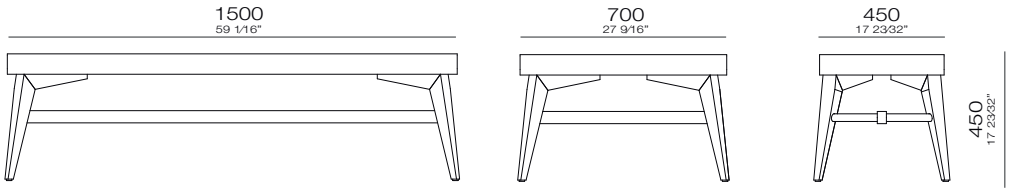

D U O M O

DUOMO

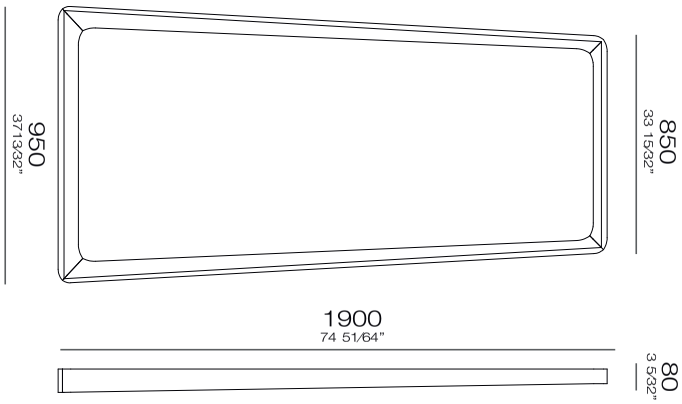

FRAME

FRAME

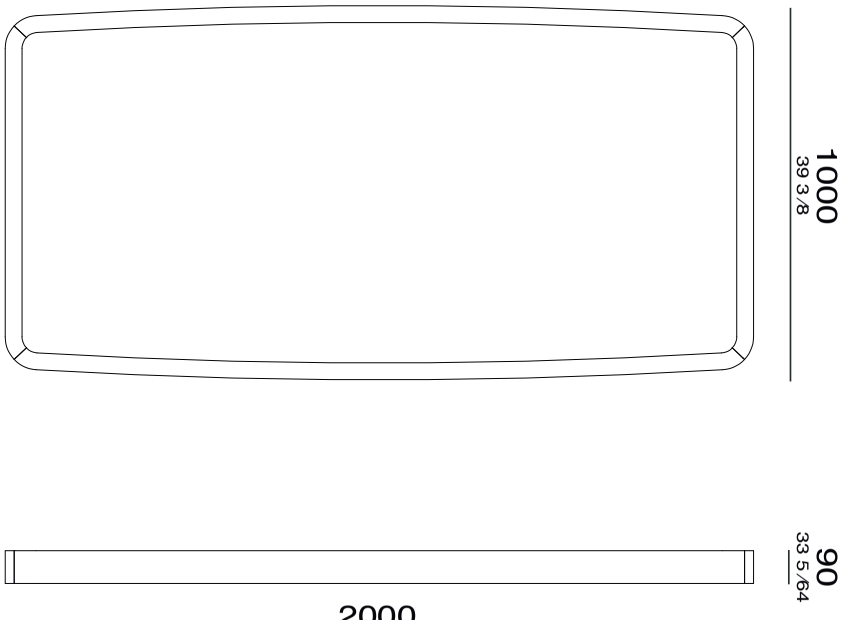

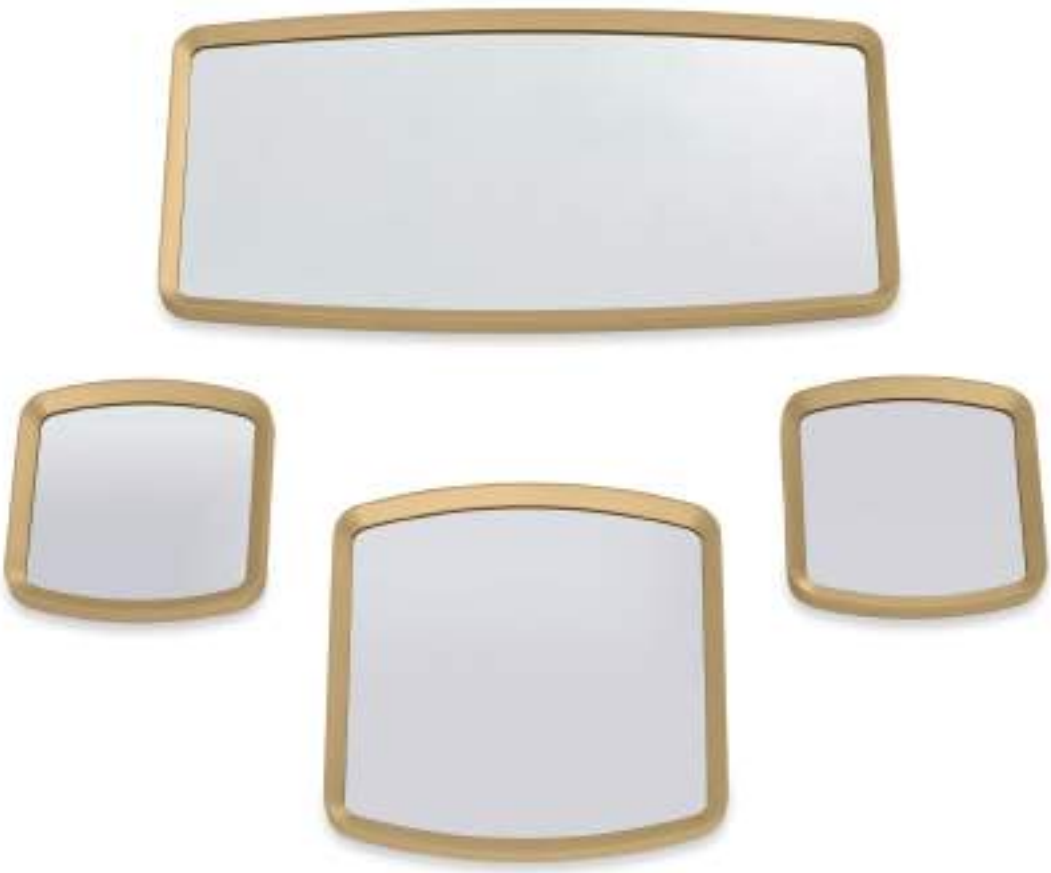

F R A M E

FRAME

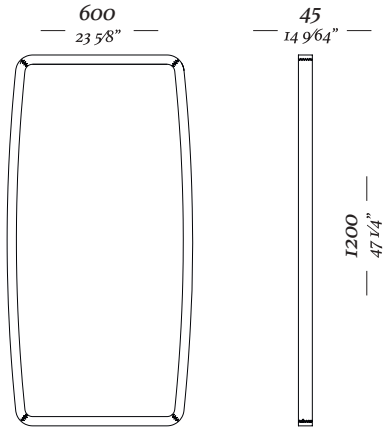

MH 9055

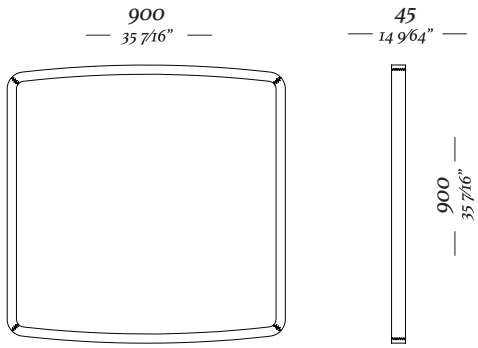

MH 9054

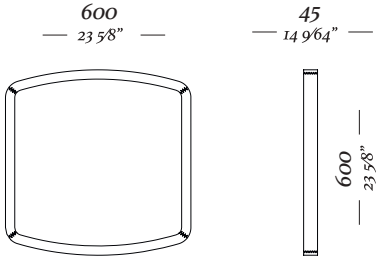

MH 9053

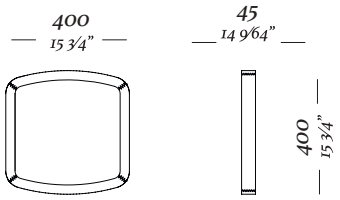

MH 9052

Varanda Sense Outdoors

BELUGA

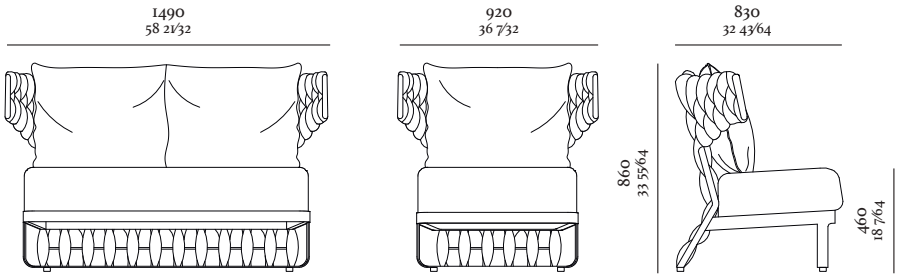

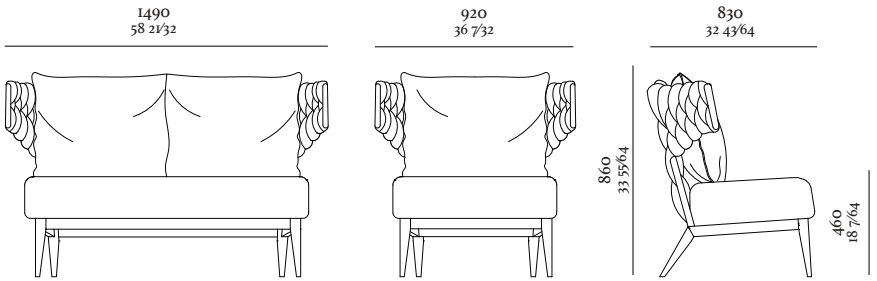

Poltrona com estrutura da base de madeira

ACABAMENTOS

OPÇÕES

BELUGA

B E L U G A

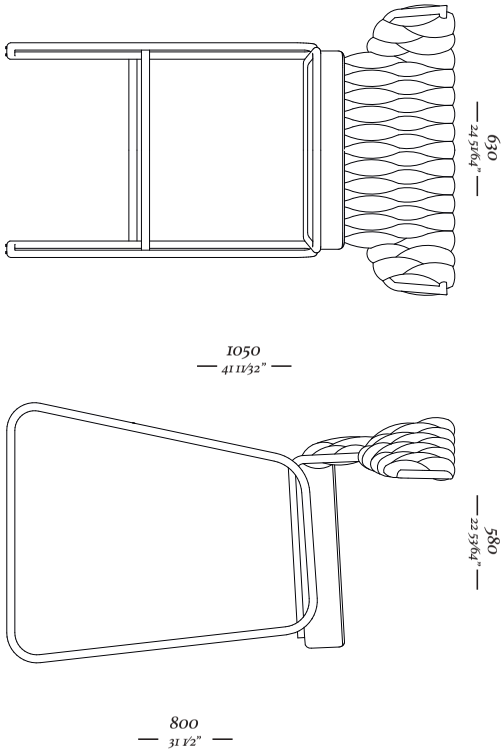

SCALENE

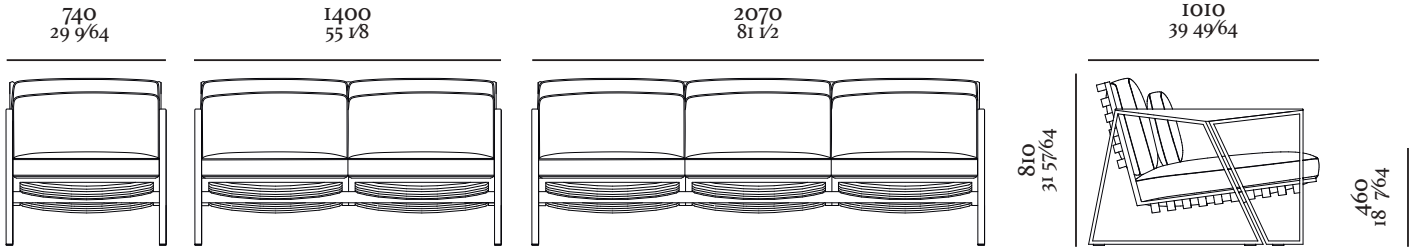
740
29 9/64
1400
55 1/8
2070
81 1/2
1010
39 49/64
810
31 57/64
460
18 7/64

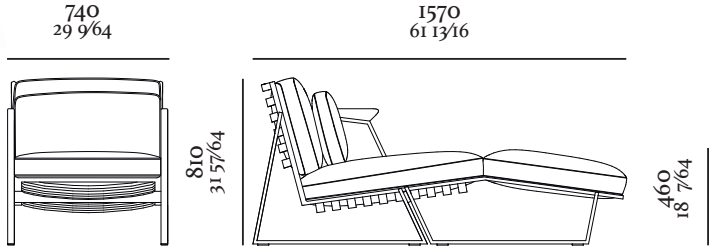
740
29 9/64
1570
61 13/16
810
31 57/64
460
18 7/64

VINE

VINE

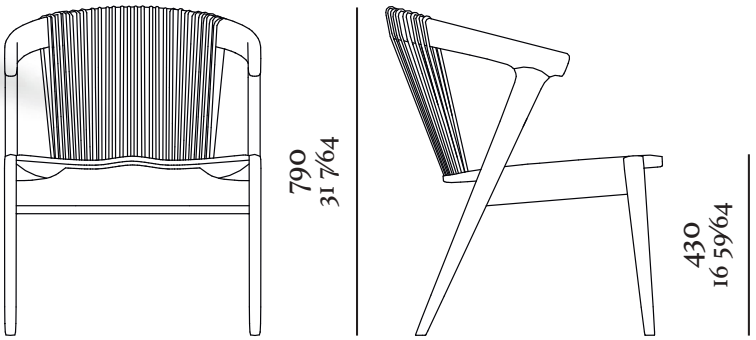
620
24 13/32
660
25 63/64
790
31 7/64
430
16 59/64

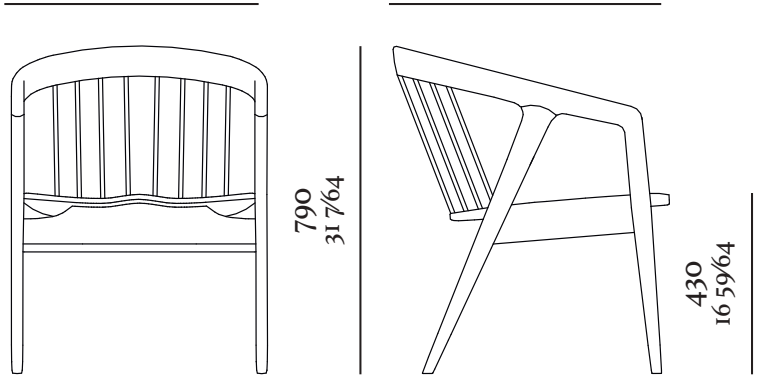
620
24 13/32
660
25 63/64
790
31 7/64
430
16 59/64

GIG

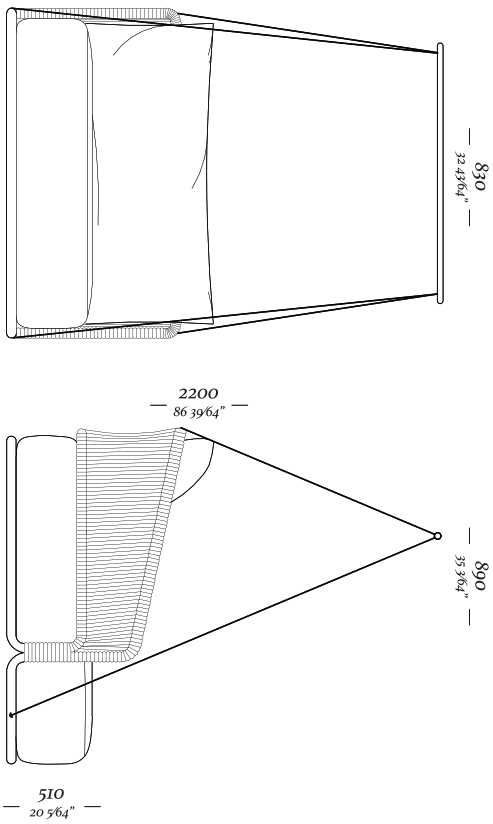

G I G

GIG

GIG

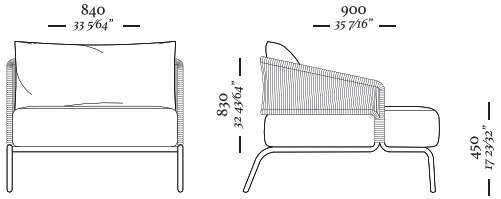

Poltrona
840x900x830mm

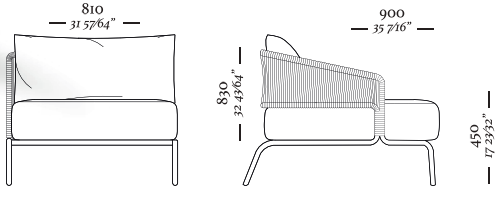

Módulo com 1 braço
810x900x830mm

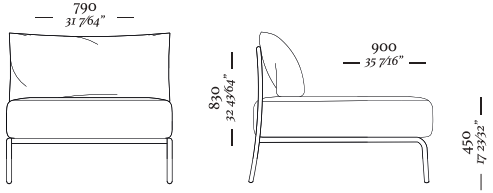

Módulo sem braços
790x900x830mm

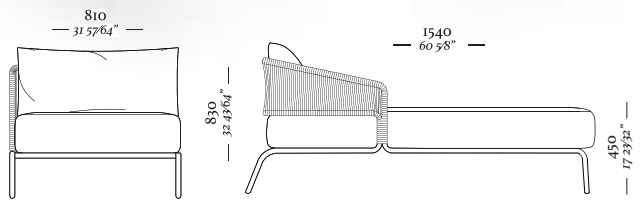

Chaise Longue
1 Braço
810x1540x830mm

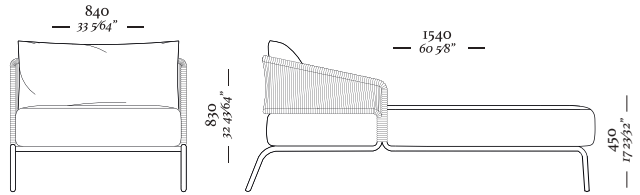

Chaise Longue
2 Braços
840x1540x830mm

heritage brazil

87 Powell Avenue
Southampton, NY 11968

Lilian Vianna
Cell: +1 (917) 881 0655
lilian@heritagebrazil.com

Tathiana Teixeira
Cell: +1 (917) 860 0002